Borough of Chambersburg

A full service municipality in Franklin County
celebrating over 65 years of consumer owned natural gas service
over 120 years of community electric and a
regional wastewater, water, and municipal solid waste utility

October 2, 2020

ADDENDUM NO. 1

To the Contract Documents for
Sitework at the Commerce Street
Electric Substation

For

The Borough of Chambersburg, PA

In accordance with the requirements of the "Instructions to Bidders", this Addendum shall be attached to and become a part of the Contract Documents for the above referenced project.

---

1. Bid Due date and opening changes:

Replace "Bids for items covered by these Specifications must be received by the Borough Secretary,100 South Second Street, Chambersburg, Pennsylvania 17201, before 2:30 P.M., legal time, October 7, 2020."

With "Bids for items covered by these Specifications must be received by the Borough Secretary,100 South Second Street, Chambersburg, Pennsylvania 17201, before 2:30 P.M., legal time, **October 14, 2020**.

2. Instruction to Bidders Section 7 – Interpretations and Addenda:

Replace "Any questions or requests for interpretation of any provision of the Bidding Documents shall be made to Jeff Heverley, Assistant Electric Superintendent, at jheverley@chambersburgpa.gov at least five (5) days prior to the submission deadline."

With "Any questions or requests for interpretation of any provision of the Bidding Documents shall be made to Jeff Heverley, Assistant Electric Superintendent, shall be submitted **by 5 PM on October 7, 2020**. If necessary, final Addendum will be issued by 5PM on October 9, 2020."

100 S. 2nd Street, Chambersburg, Pennsylvania 17201-2512
Telephone (717) 264-5151 • Fax (717) 264-0224 http://www.chambersburgpa.gov

3. RFI Questions and Answers received as of 10/02/2020:

Attached are the Questions and Answers to questions received as of 10/02/2020.

4. Geotechnical Report:

Attached Hillis-Carnes Engineering Associates, Inc. Geotechnical Report for Project Site. The Report includes boring locations for the transmission and distribution poles that are outside of Bidder/Contractor scope.

5. Revised Foundation Drawing Set:

Attached Revised Preston Waller & Associates, Inc. Foundation drawing set with Revision 2 items to replace set originally supplied only included Revision 1 items

6. Sitework Drawing Set:

Attached Dennis E Black Engineering, Inc. Sitework Drawing Set. This now depicts what will be the existing grade for start of Contract Work and final grade that will exist at the end of Contract Work.

END OF ADDENDUM NO.1

Borough of Chambersburg

A full service municipality in Franklin County
celebrating over 65 years of consumer owned natural gas service
over 120 years of community electric and a
regional wastewater, water, and municipal solid waste utility

NOTICE OF RECEIPT

I have received the Addendum No. 1 for the **Sitework at the Commerce Street Electric Substation.**

_____
Company

_____
Contact Person

_____
Date Received

Mail to: Jennifer Sprenkle
Borough of Chambersburg
100 South Second Street
Chambersburg, PA 17201
or Fax: 717-261-3240
email: jcappuccio@chambersburgpa.gov

Answers to RFI questions received as of 10/2/2020

1. Is Contractor responsible for making the ground connections from grid to the fence.
    a. Yes.
2. Please clarify that we are to include sales tax on material that we supply in our quote.
    a. This is specifically addressed in the Instructions to Bidders Section 12 and Section 9 of the General Terms and Conditions. No sales tax shall be indicated as to be passed along to the Borough. The Borough is tax exempt and will not directly pay any tax. Bidder shall take into account any taxes they will have to pay through procurement in their pricing submitted.
3. Are we to include fees for the building permit?
    a. No. No permit is needed and if it is found otherwise the Borough will cover any such expenses. Per the Uniform Construction Code: "A permit is not required for the installation, alteration or repair of generation, transmission, distribution, metering or other related equipment that is, by established right, under the ownership and control of public services agencies."
4. Please clarify who is responsible for testing.
    a. Required testing and responsibility has been included in revisions to the PWA foundation drawing set issued via addendum #1. Carefully review all notes on Sheet 2800-2001BL.
5. Please verify that the bolt templates are being supplied by others.
    a. Anchor bolt supply requirements have been included in revisions to the foundation drawing set.
6. I did not see a bolt detail for H8. Please provide.
    a. Anchor bolt details for H8, L1, L2, L3, L4 have been included in revisions to the foundation drawing set.
7. There seems to be 2 sets of conflicting details for H5, H6, & H7 on sheet 2800-2006ABL. Please clarify.
    a. Anchor bolt detail descriptions have been modified in revisions to the foundation drawing set.
8. I did not see a spacing requirement for the UDI Inc. 4" duct donut spacers. Please provide.
    a. Spacing between the ducts can be determined from the drawing because it is scaled. If the question refers to the frequency at which the spacers are placed, this is at the discretion of the contractor, and varies based on the conduit layout. The impetus is on the contractor to construct per the plans and to construct per the plans implies that the contractor maintain duct spacing per the plans.
9. Please verify that the HV structure is on the right side of page 2800-3201BL with the "A" frame.
    a. There are multiple HV 69 kV structures: an A-Frame; lighting arrestor stand; a PT stand; and a switch stand. In general, yes, these are oriented on the right side of drawing 2800-3201BL as confirmed by the following drawing showing the identified Section A-A.
10. Can you provide a section showing the right side view of the HV structure?
    a. The Borough is awaiting the updated drawing set with project specific attributes from the material procurement Contactor. This Addendum #1 is being issues prior to receipt due to timing. These drawings are expected early next week and will be supplied to Bidders via Addendum upon receipt; likely on 10/5/2020 or 10/6/2020.
11. Are items G & F on page 2800-3202BL part of the HV structure?
    a. Items G & F are the lighting mast and extension as referenced on the list on the right side of the page. Reference the foundation drawings for location.
12. I have not found item A on the plans (15KV bay structure). Please clarify.
    a. Item A has been included in revisions to the structure installation drawing set. More specific details on the exact components being supplied will be provided in forthcoming Addendum upon Receipt from Tatman Associates per answer 10 above.
13. I found item #18 on section C-C sheet 2800-3204BL but not on the materials list. Please clarify.
    a. Item 18 has been removed in revisions to the structure installation drawing set.
14. I did not find items 5, 16, 19, 24, 25, or 26 on the drawings. Please clarify.
    a. Item 5 is the bus tubing. It is in numerous, multiple locations throughout the elevation plans and will not be explicitly referenced in each location for the sake of clarity of the plans.
    b. Item 16 is shown on drawing 2800-3202BL.
    c. Item 19 is the dampening wire required in the Summary of Work document that accompanies the contract documents. Bidder will place this wire inside the bus tubing (Item 5) when tubing length exceeds 5 feet.
    d. Item 24 is shown on drawing 2800-3202BL.
    e. Item 25 and item 26 are grounding connectors. Every column on every foundation requires a ground attachment. These are not explicitly shown, are used to attach the ground grid to the structure, and have been revised by the substation packager. As with answer 10 above these will be more specifically shown on forthcoming Tatman drawings.
15. Can you provide us with an itemized materials list for the HV and the LV structures showing quantities?
    a. The Borough can provide information on quantities but doing so in no way would relieve the Contractor's obligations under the Summary of Work document. As with answer 10 above these will be more specifically shown on forthcoming Tatman drawings.

HILLIS-CARNES
ENGINEERING ASSOCIATES

Geotechnical Engineering Study
Chambersburg Substation
Chambersburg, Pennsylvania
HCEA Project No. H19104

September 27, 2020

Prepared For:

Preston Waller & Associates
4510 Coulbourn Mill Road
Salisbury, Maryland 21804

HILLIS-CARNES
ENGINEERING ASSOCIATES, INC.

10228 Governor Lane Boulevard
Suite 3007
Williamsport, MD 21795
Phone 301-582-4662
Fax 301-582-4614
www.hcea.com

September 27, 2020

Preston Waller & Associates
4510 Coulbourn Mill Road
Salisbury, Maryland 21804

Attention: Mr. Jay Waller

Re: Geotechnical Engineering Study
Chambersburg Substation - Solar Farm
421 Commerce Street, Chambersburg, PA
HCEA Project No.: H02124

Dear Mr. Waller;

Hillis-Carnes Engineering Associates, Inc. (HCEA) is pleased to submit this report concerning the subsurface exploration and geotechnical evaluation for the new solar farm construction to be located within and adjacent to the existing electrical substation at 421 Commerce Street, Chambersburg, PA.

The report explains the exploration procedures, describes the general site and subsurface conditions, and presents estimated soil parameters to aid in the foundation design for the project.

We wish to advise you that the boring samples will be stored at our Williamsport, Maryland office for a period of 30 days from the date of this letter. Should you wish the samples to be stored for a longer period of time or to be delivered to you or another party, please advise us in writing prior to the end of the 30-day period. Otherwise, the samples will be discarded at the end of the 30-day storage period.

We appreciate having been of service to you in the subsurface exploration phase of this project and are prepared to assist you during the construction phase as well. If you have any questions concerning this report or any of our consulting, design, testing and inspection services, please contact this Office.

Very truly yours,
HILLIS-CARNES ENGINEERING ASSOCIATES, INC.

COMMONWEALTH OF PENNSYLVANIA
REGISTERED PROFESSIONAL
NATHANIEL JAMES LAUVER
ENGINEER
No. PE074285

Cindy S. Shepeck
Senior Project Manager

Nathaniel J. Lauver, P.E.
Geotechnical Engineer

TABLE OF CONTENTS

LETTER OF TRANSMITTAL i

1.0 PURPOSE AND SCOPE 1

2.0 PROJECT DESCRIPTION 1

3.0 FIELD EXPLORATION 2

4.0 SUBSURFACE CONDITIONS 2

4.1 Project Site Geology 2

4.2 Subsurface Materials 3

4.3 Groundwater 3

5.0 EVALUATIONS 4

5.1 General Site Preparation 4

5.2 Foundations 5

5.3 Groundwater and Drainage 6

6.0 RECOMMENDED ADDITIONAL SERVICES 6

7.0 REMARKS 6

APPENDIX 8

GEOTECHNICAL ENGINEERING STUDY
CHAMBERSBURG SUBSTATION – SOLAR FARM
CHAMBERSBURG, PENNSYLVANIA
HCEA PROJECT NO. H20124

1.0 PURPOSE AND SCOPE

The purpose of this study was to evaluate the subsurface conditions at the test boring locations with respect to the geotechnical aspects of the project. More specifically, the purpose of this study included the following objectives:

1. To determine the general subsurface conditions at the boring locations, including soil and groundwater conditions.

2. Provide applicable estimated soil strength parameters to aid in the design of the required foundation systems.

3. Provide allowable bearing capacity for the design of the foundation for the proposed electrical transformer pad and power poles.

4. Provide resistivity values for proposed off-site backfill materials.

The evaluations and recommendations presented in this report were based on our understanding of the proposed construction and on the general subsurface conditions encountered at the boring locations. Should the project characteristics be altered from those discussed or should different subsurface conditions be encountered during construction, this office should be consulted, as the evaluations and recommendations presented may no longer be valid. Also, we emphasize that this exploration and evaluation was performed only at the specific boring locations. Subsurface conditions in other areas may be different. An Appendix contains a summary of the field work for this project.

2.0 PROJECT DESCRIPTION

The project site is located at 421 Commerce Street, Chambersburg, Pennsylvania within an electrical substation complex. Construction at the site is to include an additional substation to facilitate the new solar farm (to be constructed by others) located to the northwest of the existing substation. The project location is shown on the Project Location Maps (Figure 1) in the Appendix.

It is our understanding that the proposed construction will include a reinforced concrete electrical transformer/oil containment mat foundation, whereas for the A-Frame and support structures will be reinforced concrete pier foundations ranging in diameter from 18-inches to 36-inches. According to the information provided, the pier foundations are proposed to be embedded into “sound” rock ranging between 24-inches to 42-inches, for the support structures and A-Frame foundations, respectively. Anticipated loading criteria for these foundations was provided by the structural engineer, in which the loading of the transformer structure will be 4 kips/sq. foot with a maximum overturn load of 40 kips whereas the support structures and A-frames will be an end-bearing of 4 kips. Additionally, it has been assumed that a maximum tolerable total settlement of 1-inch with a differential settlement of less than 0.5 inch will be tolerable by the structures.

3.0 FIELD EXPLORATION

In order to determine the soil types and to develop design parameters, six (6) Standard Penetration Test (SPT) borings were drilled in the general area of the proposed transformer and “A” frame and support structures. The borings were to be advanced to a maximum depth of 24 feet below the existing site surface grade. The approximate test boring locations are shown on the Boring Location Map (Figure 2) in the Appendix.

The borings were advanced with hollow-stem augers, and the subsurface soils were sampled at 2.5 ft. and 5.0 ft. intervals. Samples were taken by driving a 1-3/8 inch I.D. (2-inch O.D.) split-spoon sampler in accordance with ASTM D-1586 specifications. The sampler was first seated 6 inches to penetrate any loose cuttings and then was driven an additional foot with blows of a 140-pound hammer falling 30 inches. The number of hammer blows required to drive the sampler the final foot is designated as the "Penetration Resistance" or "N" value.

Where auger refusal was encountered prior to boring termination depth, the underlying bedrock was samples by coring methods to ascertain the bearing bedrock. Auger refusal is the designation applied when the power auger can no longer penetrate the underlying materials and is indicative of the upper surface of bedrock, boulders, or hard fill materials. The recovery and RQD (Rock Quality Designation) percentages are shown on the Rock Core Logs. Analysis and interpretation of the recovery and RQD percentages provide a general description of the overall rock quality.

Rock coring was performed at all boring locations and extended to depths of 9.5-feet to 24-feet below existing site grades. The findings of the rock core exploration can be found on the Rock Core Logs located in the Appendix of this report.

The soil samples were visually classified in accordance with the Unified Soil Classification System (USCS). Records of Soil Exploration that indicates the subsurface conditions encountered are included in the Appendix.

Additionally, an off-site backfill PennDOT 2A material sample was obtained from the SGI Charmian Quarry located in Blue Ridge Summit, PA for determining the resistivity component, Standard Proctor (ASTM D-698) and USCS classification to be used within our lateral earth pressures for the upper portions of the drilled piers.

4.0 SUBSURFACE CONDITIONS

4.1 Project Site Geology

The Geologic Map of Pennsylvania (1980) shows that the project site is located within the Ridge and Valley physiographic region where the parent bedrock formation includes materials from the Ordovician aged Martinsburg Formation. Bedrock in this location strikes northeast/southwest and dips steeply to the southeast. The following is a description of the aforementioned-geologic formation:

Martinsburg Formation
"Black, carbonaceous and fissile shale, weathers buff. Vertical pattern indicates yellow-green to dark gray, fine-grained, graywacke beds. Horizontal pattern indicates shale with bands of thin siltstone and graywacke beds."

4.2 Subsurface Materials

The surficial materials generally consisted of material visually classified as silty Sand (SM) with varying amounts of weathered rock fragments and some clay. These materials were encountered within all the borings except for B-1 and extended in depths ranging from 1-ft below existing site grades at B-2 to 19-ft within P-1. The relative densities of the surficial materials generally indicated densities in the dense to very dense with "N" values ranging from 37 to 50/5".

Auger refusal was encountered in all borings prior to reaching termination depth. Refusal is a designation typically applied to material having a penetration resistance in excess of 50 blows per inch or material that cannot be penetrated with the augers.

Auger refusal was encountered at the boring locations ranging between 0.5 to 19.0 feet below existing site grades, at which rock coring commenced. Rock cores were extended a minimum of 5-ft to a maximum of 20 ft below auger refusal, depending on boring location. In general, the cores indicated a fine-grained shale which was very broken to massive,

highly weathered to fresh and hard. Rock core recovery values within the bedrock were between 84 and 100 percent and Rock Quality Designation (RQD) values within the shale bedrock range between 36 and 97 percent. Refer to the Rock Core Logs for further data regarding the rock core recovery and RQD percentages.

Rock Depth Summary Table:

Boring Number	Surface Elevation	Depth to Rock	Elevation of Rock	Foundation Type
P-1	660+/-	19.0 feet	641+/-	Pier
P-2	625+/-	4.5 feet	620.5+/-	Pier
P-3	624+/-	4.5 feet	619.5+/-	Pier
B-1	624+/-	0.5 feet	623.5+/-	Pier
B-2	624+/-	1.0 feet	623+/-	Mat
B-3	624+/-	2.0 feet	622+/-	Pier

4.3 Groundwater

Groundwater was not encountered in any of boring locations at the time of drilling however, at boring completions water was measured to be 1.2 to 22 feet below site grades. It should be noted that these water levels measured may be residual water from the coring operations. A more accurate determination of the hydrostatic water table would require the installation of perforated pipes or piezometers that could be monitored over an extended period of time. The actual level of the hydrostatic water table and the amount and level of perched water should be anticipated to fluctuate throughout the year, depending on variations in precipitation, surface run-off, infiltration, site topography, and drainage.

During construction, if is recommended that any water infiltration resulting from precipitation, surface run-off, or perched water be controlled by means of sump pits and pumps, or by gravity ditching procedures. The groundwater should be maintained a minimum of 2 feet below the bottom of all excavations during construction. If conditions are encountered that cannot be handled in such a manner, the contractor may determine that a more elaborate dewatering system is required.

5.0 EVALUATIONS

Our findings indicate that the proposed transformer pad can be supported utilizing shallow foundational support whereas the design drilled piers utilizing an end-bearing system will be adequate for the support structures and A-frames. The following recommendations have been developed on the basis of the previously described project characteristics and subsurface conditions. If there are any changes to the project characteristics or if different subsurface conditions are encountered during construction, Hillis-Carnes should be consulted so that the recommendations of this report can be reviewed and revised, if necessary.

5.1 Foundations

It is our understanding that two types of foundations are proposed for this project. The first foundation type consists of reinforced concrete piers. These piers are anticipated to be 18-inches to 36-inches in diameter. These piers will be utilized at the support structures and A-frame supports.

The second type of foundation consists of reinforced concrete mat foundation. This foundation will be utilized to support a transformer and oil containment system.

Transformer Pad

Based on the general soil conditions that were encountered, it is our judgment that the design allowable soil bearing pressure of 4000 lbs/sq ft can be used for foundations to be supported on approved rock. We also recommend a compacted bedding layer consisting of approximately 6-inches of PennDot 2A be placed on the rock surface in order to have a consistent bearing stratum.

The foundation excavation should be inspected by a Geotechnical Engineer or experienced Soils Inspector prior to the placement of the bedding materials and subsequent concrete. The purpose of the inspection would be to verify that the exposed materials will be capable of supporting the design bearing pressure.

Since some of the proposed foundations are relatively close to each other, special design considerations should be evaluated in such a way that stresses imposed by the new footings will not overstress either any existing footings or newly placed footings. This can be done by locating new footings in such a manner that imaginary lines extended downward and outward from the bottom edge of the new footings at a 45-degree angle will not intersect existing footings. Such a requirement would also apply for new footings that are to be located near the zone of influence of other new footings.

To help preclude the possible undermining of existing footings, excavations for new footings should not extend below imaginary lines extending downward and outward from the bottom edges of the existing footings at a 45-degree angle. If any of these criteria cannot be met, the Geotechnical Engineer should be consulted for further evaluation.

Footings should be located at depths of at least 36 inches below final exterior grades so as to provide adequate protection from frost heave.

5.2 Pier Foundations

Based on the information provided, the drilled piers are to be embedded into competent rock a minimum of 24-inches to 42-inches so that the drilled piers would bear on competent shale bedrock.

Care should be taken during excavation to ensure that all shafts have a flat, level rock surface at the proposed tip elevation. Drilled shafts bearing on rock can be designed for an allowable end bearing pressure 4 ksf for downward loads. The shafts should be socketed so as to provide a bearing surface at least two (2) feet into the competent shale strata.

The following table summarizes the engineering characteristics of the soils encountered in the borings:

Boring	Approx. Depth (ft)	Unified Soil Classification	Effective Total Unit Weight (pcf)	Internal Angle of Friction (ϕ)	Allowable End Bearing (tsf)
B-1	0.0-5.5	Broken Shale	-----	-----	-----
	5.5-20.5	Shale	140.0	35.0	4.0
B-2	0-1.0	Broken Shale	-----	-----	-----
	1-11.0	Shale	140.0	35.0	4.0
B-3	0-2.0	Broken Shale	-----	-----	-----
	2-12.0	Shale	140.0	35.0	4.0
P-1	0-19.0	Sandy Silt w/ rock fragments	125.0	30.0	-----
	19.0-24.0	Shale	140.0	35.0	4.0
P-2	0-4.5	Sandy Silt w/ rock fragments	125.0	28.0	-----
	4.5-9.5	Shale	140.0	30.0	4.0
P-3	0-1.0	Sandy Silt w/ rock fragments	125.0	28.0	-----
	1.0-6.0	Shale	140.0	30.0	4.0

A factor of safety of 3 was applied to the net end bearing values that were calculated. The given allowable end bearing capacities may need to be adjusted where strata changes occur within the zone of influence below the foundation base, depending on the diameter of the proposed foundation.

5.3 Off-Site Borrow

Due to the transformer pad bearing up to 4-ft below existing site grades, the backfill material is to be considered within the grounding parameters of the electrical system. As per the design team, the maximum resistivity test value of 200 ohm-cm is to be utilized within the design parameters. The contractor will need to submit an off-site soil sample of the backfill materials to our office to verify that this soil parameter is achieved.

All backfill utilized for the transformer pad should be placed in relatively horizontal 6-inch (maximum) loose lifts and should be compacted to a minimum of 95 percent of the maximum dry unit weight of a Standard Proctor, a moist unit weight of 120 pcf can be utilized for lateral earth pressure determination.

5.4 Groundwater and Drainage

As previously mentioned, groundwater was not encountered within the depths explored in the borings at the time of our subsurface exploration. Therefore, major groundwater related problems are not anticipated during construction.

Any water infiltration resulting from surface runoff and/or perched water should be able to be controlled by means of sump pits and pumps. If any conditions are encountered which cannot be handled in such a manner, this office should be consulted.

6.0 RECOMMENDED ADDITIONAL SERVICES

Additional soil and foundation engineering, testing, and consulting services recommended for this project are summarized below:

Foundation Excavation Inspections: A Geotechnical Engineer or experienced Soils Inspector should inspect the foundation excavation. He should verify that the design bearing pressure is available and that no loose pockets exist beneath the bearing surface of the foundation excavation. Based on the inspection, the Inspector would either approve the bearing surface or recommend that loose or soft soils be undercut to expose satisfactory bearing materials.

7.0 REMARKS

This report has been prepared to aid in the evaluation of the site for the proposed construction. It is considered that adequate recommendations have been provided to serve as a basis for design and preparation of plans and specifications. Additional recommendations can be provided as needed.

These analyses and recommendations are, of necessity, based on the information made available to us at the time of the actual writing of the report and the on-site surface and subsurface conditions which existed at the time the exploratory borings were drilled. Further assumption has been made that the limited exploratory borings, in relation both to the areal extent of the site and to depth, are representative of conditions across the site.

If subsurface conditions are encountered which differ from those reported herein, this Office should be notified immediately so that the analyses and recommendations can be reviewed and/or revised, as necessary. It is also recommended that:

1. We are given the opportunity to review any plans and specifications in order to comment on the interaction of the soil conditions as described herein and the design requirements.

2. A Geotechnical Engineer or experienced Soils Inspector is present at the site during the construction phase to verify installation according to the approved plans and specifications. This is particularly important during excavation, placement, and compaction of fill materials.

Please note that successful completion of the project is dependent on your compliance with all of the recommendations provided in this report. While represented separately, the recommendations represent work that is intertwined. The successful completion of the project is specifically conditioned on your complying with all recommendations.

Our professional services have been performed, our findings obtained, and our recommendations prepared in accordance with generally accepted engineering principles and practices. This warranty is in lieu of all other warranties either implied or expressed. HCEA assumes no responsibility for interpretations made by others based on work or recommendations by us.

APPENDIX

Important Information about your Geo Report by GBA

Figure 1: Project Location Plan

Figure 2: Test Boring Location Plan

Records of Rock Cores

ASTM-D2487 General Geotechnical Notes

Important Information about This

Geotechnical-Engineering Report

Subsurface problems are a principal cause of construction delays, cost overruns, claims, and disputes.

While you cannot eliminate all such risks, you can manage them. The following information is provided to help.

The Geoprofessional Business Association (GBA) has prepared this advisory to help you – assumedly a client representative – interpret and apply this geotechnical-engineering report as effectively as possible. In that way, clients can benefit from a lowered exposure to the subsurface problems that, for decades, have been a principal cause of construction delays, cost overruns, claims, and disputes. If you have questions or want more information about any of the issues discussed below, contact your GBA-member geotechnical engineer. Active involvement in the Geoprofessional Business Association exposes geotechnical engineers to a wide array of risk-confrontation techniques that can be of genuine benefit for everyone involved with a construction project.

Geotechnical-Engineering Services Are Performed for Specific Purposes, Persons, and Projects

Geotechnical engineers structure their services to meet the specific needs of their clients. A geotechnical-engineering study conducted for a given civil engineer will not likely meet the needs of a civil-works constructor or even a different civil engineer. Because each geotechnical-engineering study is unique, each geotechnical-engineering report is unique, prepared *solely* for the client. *Those who rely on a geotechnical-engineering report prepared for a different client can be seriously misled*. No one except authorized client representatives should rely on this geotechnical-engineering report without first conferring with the geotechnical engineer who prepared it. *And no one – not even you – should apply this report for any purpose or project except the one originally contemplated.*

Read this Report in Full

Costly problems have occurred because those relying on a geotechnical-engineering report did not read it *in its entirety*. Do not rely on an executive summary. Do not read selected elements only. *Read this report in full.*

You Need to Inform Your Geotechnical Engineer about Change

Your geotechnical engineer considered unique, project-specific factors when designing the study behind this report and developing the confirmation-dependent recommendations the report conveys. A few typical factors include:

- the client's goals, objectives, budget, schedule, and risk-management preferences;
- the general nature of the structure involved, its size, configuration, and performance criteria;
- the structure's location and orientation on the site; and
- other planned or existing site improvements, such as retaining walls, access roads, parking lots, and underground utilities.

Typical changes that could erode the reliability of this report include those that affect:

- the site's size or shape;
- the function of the proposed structure, as when it's changed from a parking garage to an office building, or from a light-industrial plant to a refrigerated warehouse;
- the elevation, configuration, location, orientation, or weight of the proposed structure;
- the composition of the design team; or
- project ownership.

As a general rule, *always* inform your geotechnical engineer of project changes – even minor ones – and request an assessment of their impact. *The geotechnical engineer who prepared this report cannot accept responsibility or liability for problems that arise because the geotechnical engineer was not informed about developments the engineer otherwise would have considered.*

This Report May Not Be Reliable

Do not rely on this report if your geotechnical engineer prepared it:

- for a different client;
- for a different project;
- for a different site (that may or may not include all or a portion of the original site); or
- before important events occurred at the site or adjacent to it; e.g., man-made events like construction or environmental remediation, or natural events like floods, droughts, earthquakes, or groundwater fluctuations.

Note, too, that it could be unwise to rely on a geotechnical-engineering report whose reliability may have been affected by the passage of time, because of factors like changed subsurface conditions; new or modified codes, standards, or regulations; or new techniques or tools. *If your geotechnical engineer has not indicated an "apply-by" date on the report, ask what it should be*, and, in general, *if you are the least bit uncertain* about the continued reliability of this report, contact your geotechnical engineer before applying it. A minor amount of additional testing or analysis – if any is required at all – could prevent major problems.

Most of the "Findings" Related in This Report Are Professional Opinions

Before construction begins, geotechnical engineers explore a site's subsurface through various sampling and testing procedures. *Geotechnical engineers can observe actual subsurface conditions only at those specific locations where sampling and testing were performed.* The data derived from that sampling and testing were reviewed by your geotechnical engineer, who then applied professional judgment to form opinions about subsurface conditions throughout the site. Actual sitewide-subsurface conditions may differ – maybe significantly – from those indicated in this report. Confront that risk by retaining your geotechnical engineer to serve on the design team from project start to project finish, so the individual can provide informed guidance quickly, whenever needed.

This Report's Recommendations Are Confirmation-Dependent

The recommendations included in this report – including any options or alternatives – are confirmation-dependent. In other words, *they are not final*, because the geotechnical engineer who developed them relied heavily on judgment and opinion to do so. Your geotechnical engineer can finalize the recommendations *only after observing actual subsurface conditions* revealed during construction. If through observation your geotechnical engineer confirms that the conditions assumed to exist actually do exist, the recommendations can be relied upon, assuming no other changes have occurred. *The geotechnical engineer who prepared this report cannot assume responsibility or liability for confirmation-dependent recommendations if you fail to retain that engineer to perform construction observation.*

This Report Could Be Misinterpreted

Other design professionals' misinterpretation of geotechnical-engineering reports has resulted in costly problems. Confront that risk by having your geotechnical engineer serve as a full-time member of the design team, to:

- confer with other design-team members,
- help develop specifications,
- review pertinent elements of other design professionals' plans and specifications, and
- be on hand quickly whenever geotechnical-engineering guidance is needed.

You should also confront the risk of constructors misinterpreting this report. Do so by retaining your geotechnical engineer to participate in prebid and preconstruction conferences and to perform construction observation.

Give Constructors a Complete Report and Guidance

Some owners and design professionals mistakenly believe they can shift unanticipated-subsurface-conditions liability to constructors by limiting the information they provide for bid preparation. To help prevent the costly, contentious problems this practice has caused, include the complete geotechnical-engineering report, along with any attachments or appendices, with your contract documents, *but be certain to note conspicuously that you've included the material for informational purposes only*. To avoid misunderstanding, you may also want to note that "informational purposes" means constructors have no right to rely on the interpretations, opinions, conclusions, or recommendations in the report, but they may rely on the factual data relative to the specific times, locations, and depths/elevations referenced. Be certain that constructors know they may learn about specific project requirements, including options selected from the report, *only* from the design drawings and specifications. Remind constructors that they may perform their own studies if they want to, and *be sure to allow enough time* to permit them to do so. Only then might you be in a position to give constructors the information available to you, while requiring them to at least share some of the financial responsibilities stemming from unanticipated conditions. Conducting prebid and preconstruction conferences can also be valuable in this respect.

Read Responsibility Provisions Closely

Some client representatives, design professionals, and constructors do not realize that geotechnical engineering is far less exact than other engineering disciplines. That lack of understanding has nurtured unrealistic expectations that have resulted in disappointments, delays, cost overruns, claims, and disputes. To confront that risk, geotechnical engineers commonly include explanatory provisions in their reports. Sometimes labeled "limitations," many of these provisions indicate where geotechnical engineers' responsibilities begin and end, to help others recognize their own responsibilities and risks. *Read these provisions closely*. Ask questions. Your geotechnical engineer should respond fully and frankly.

Geoenvironmental Concerns Are Not Covered

The personnel, equipment, and techniques used to perform an environmental study – e.g., a "phase-one" or "phase-two" environmental site assessment – differ significantly from those used to perform a geotechnical-engineering study. For that reason, a geotechnical-engineering report does not usually relate any environmental findings, conclusions, or recommendations; e.g., about the likelihood of encountering underground storage tanks or regulated contaminants. *Unanticipated subsurface environmental problems have led to project failures*. If you have not yet obtained your own environmental information, ask your geotechnical consultant for risk-management guidance. As a general rule, *do not rely on an environmental report prepared for a different client, site, or project, or that is more than six months old.*

Obtain Professional Assistance to Deal with Moisture Infiltration and Mold

While your geotechnical engineer may have addressed groundwater, water infiltration, or similar issues in this report, none of the engineer's services were designed, conducted, or intended to prevent uncontrolled migration of moisture – including water vapor – from the soil through building slabs and walls and into the building interior, where it can cause mold growth and material-performance deficiencies. Accordingly, ***proper implementation of the geotechnical engineer's recommendations will not of itself be sufficient to prevent moisture infiltration.*** Confront the risk of moisture infiltration by including building-envelope or mold specialists on the design team. ***Geotechnical engineers are not building-envelope or mold specialists.***

GEOPROFESSIONAL BUSINESS ASSOCIATION

Telephone: 301/565-2733
e-mail: info@geoprofessional.org www.geoprofessional.org

Copyright 2016 by Geoprofessional Business Association (GBA). Duplication, reproduction, or copying of this document, in whole or in part, by any means whatsoever, is strictly prohibited, except with GBA's specific written permission. Excerpting, quoting, or otherwise extracting wording from this document is permitted only with the express written permission of GBA, and only for purposes of scholarly research or book review. Only members of GBA may use this document or its wording as a complement to or as an element of a report of any kind. Any other firm, individual, or other entity that so uses this document without being a GBA member could be committing negligent or intentional (fraudulent) misrepresentation.

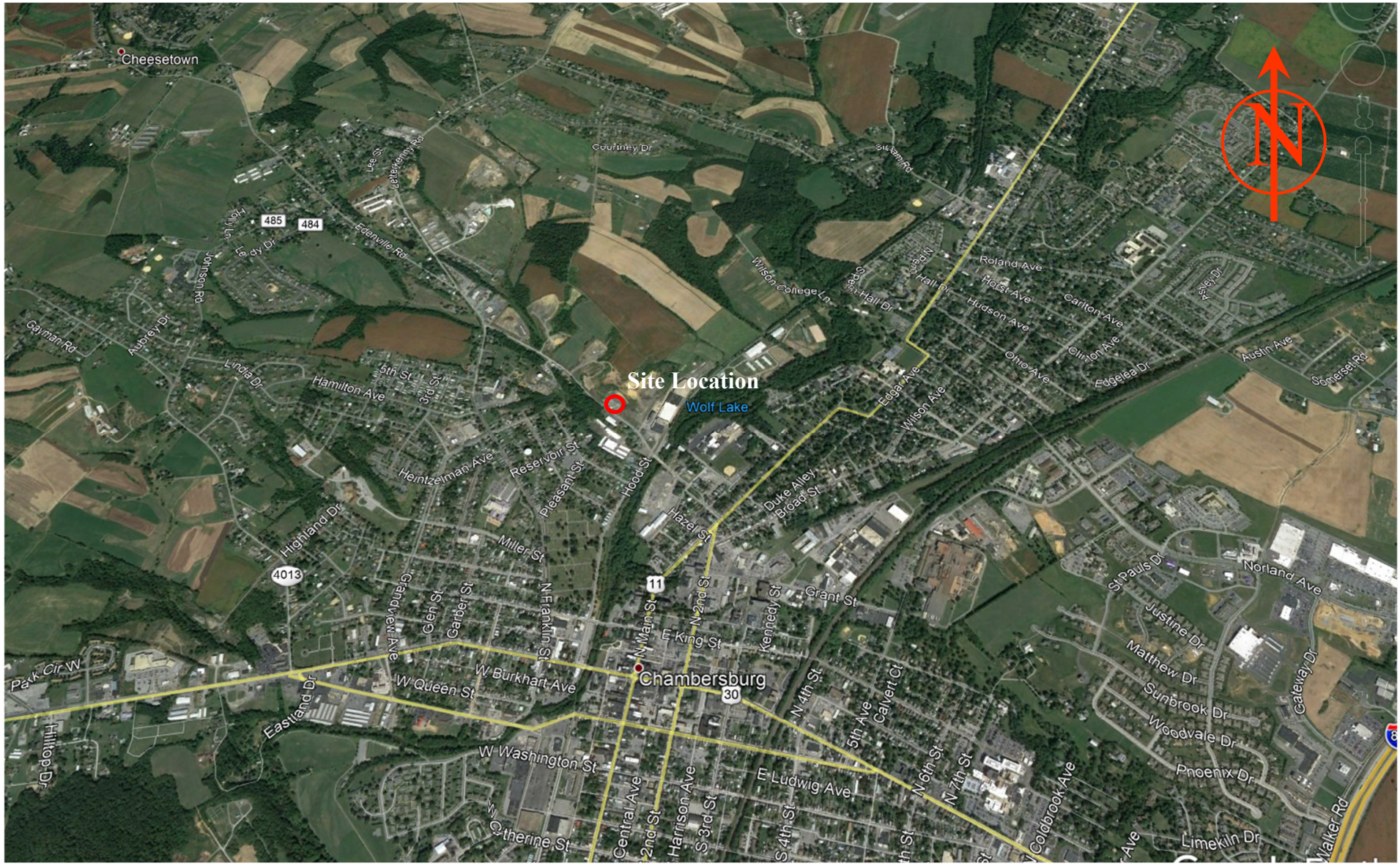

HILLIS-CARNES

ENGINEERING ASSOCIATES, INC.

Figure I
Project Location Map

Chambersburg Substation
Chambersburg, Pennsylvania
HCEA Project Number: H20124

10228 Governor Lane Boulevard
Williamsport, Maryland
Local 301-582-4662
www.hcea.com

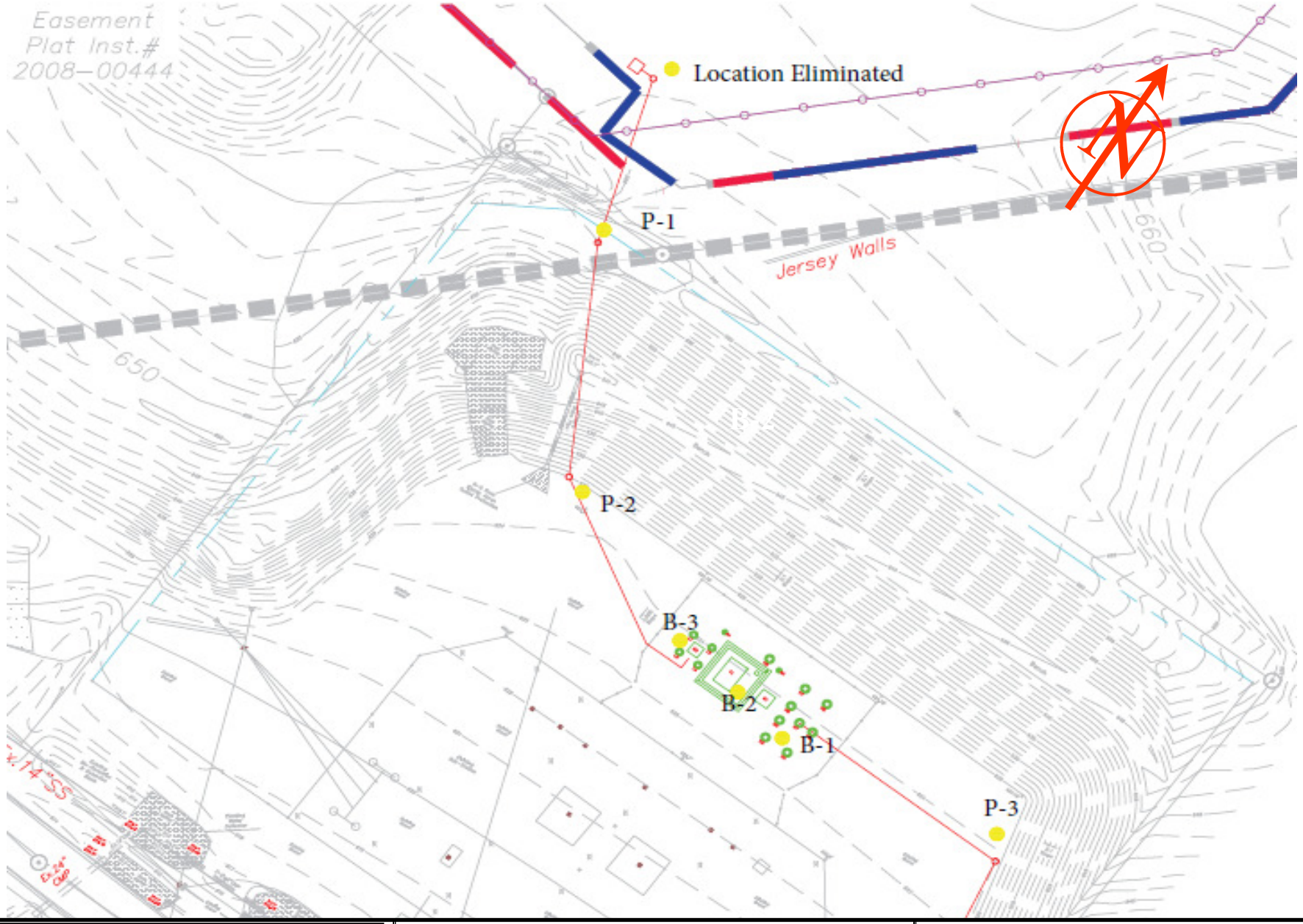

HILLIS-CARNES

ENGINEERING ASSOCIATES, INC.

Figure II
Boring Location Plan
Chambersburg Substation
Chambersburg, Pennsylvania
HCEA Project Number: H20124

10228 Governor Lane Boulevard
Williamsport, Maryland
Local 301-582-4662
www.hcea.com

HILLIS-CARNES ENGINEERING ASSOCIATES
CORE LOG

PAGE 1 OF 1 BORING NO. P-1

PROJECT:	CHAMBERSBURG SUBSTATION	COORDINATES:	
SITE:	FRANKLIN COUNTY, PENNSYLVANIA	STATION:	
COMM. NO.:	H20124 START DATE: 8.26.2020	ELEVATION:	660+/-
DRILLER:	M. STAWAS END DATE: 8.26.2020	LOGGED BY:	J. Mays /C. Shepeck

EQUIPMENT
RIG TYPE: DIETRICH D-50
CORE TYPE: NQ2
CORE SIZE: 2-INCH BARREL TYPE SOLID

DIRECTION OF BORING (measured from vertical)
VERTICAL OR AZIMUTH: VERTICAL

CORE RUN	DEPTH (ft.) From	DEPTH (ft.) To	INCHES CORED	RECOVERY Inches	RECOVERY %	RQD Inches	RQD %	CORING TIME (min.)	NOTES (Core Jam, Water Loss, etc.)
1	19.0'	24.0'	60	60	100	29	48		water at 6.7' at completion

DESCRIPTION OF ROCK TYPE

DEPTH (ft) From	DEPTH (ft) To	DESCRIPTION (Color, Type of Rock, Weathering, Hardness, Structure, etc.)
0.0	1.5'	N=51
2.5	4.0'	N=88/11"
5.0	6.5'	N=78/11"
8.5	10.0	N=72/10"
13.5	15.0	N=37
18.5	19.0	N=50/1"
		Brown to gray, damp, hard sandy Silt and rock fragments (SM)
19.0'	24.0'	Dark grey, slightly weathered, fine grained, SHALE with a silt component,
		closely to widely fractured, medium hard, with slickensides having a secondary mineralization of chlorite
		Bottom of Hole at 24'

DESCRIPTION OF JOINTS

	INCLINATION TO CORE AXIS	SHAPE AND ROUGHNESS	COATINGS	FILLING MATERIAL
a				
b				
c				
d				

OTHER DISCONTINUITIES:

HILLIS-CARNES ENGINEERING ASSOCIATES
CORE LOG

PAGE 1 OF 1 BORING NO. P-2

PROJECT:	CHAMBERSBURG SUBSTATION	COORDINATES:	
SITE:	FRANKLIN COUNTY, PENNSYLVANIA	STATION:	
COMM. NO.:	H20124 START DATE: 8.26.2020	ELEVATION:	625+/-
DRILLER:	M. STAWAS END DATE: 8.26.2020	LOGGED BY:	J. Mays /C. Shepeck

EQUIPMENT

RIG TYPE: DIETRICH D-50
CORE TYPE: NQ2
CORE SIZE: 2-INCH BARREL TYPE SOLID

DIRECTION OF BORING (measured from vertical)

VERTICAL OR AZIMUTH: VERTICAL

CORE RUN	DEPTH (ft.) From	DEPTH (ft.) To	INCHES CORED	RECOVERY Inches	RECOVERY %	RQD Inches	RQD %	CORING TIME (min.)	NOTES (Core Jam, Water Loss, etc.)
1	4.5'	9.5'	60	60	100	24.6	41		water at 2.7' at completion

DESCRIPTION OF ROCK TYPE

DEPTH (ft) From	DEPTH (ft) To		DESCRIPTION (Color, Type of Rock, Weathering, Hardness, Structure, etc.)
0.0	1.5	N=60/11"	Brown to gray, damp, hard sandy Silt and rock fragments
2.5	4.0	N=90/11"	
4.5'	9.5		Dark grey, slightly weathered, fine grained, SHALE with a silt component,
			closely to widely fractured, medium hard, with slickensides having a secondary mineralization of chlorite
			Bottom of Hole at 9.5'

DESCRIPTION OF JOINTS

	INCLINATION TO CORE AXIS	SHAPE AND ROUGHNESS	COATINGS	FILLING MATERIAL
a				
b				
c				
d				

OTHER DISCONTINUITIES:

HILLIS-CARNES ENGINEERING ASSOCIATES
CORE LOG

PAGE 1 OF 1 BORING NO. P-3

PROJECT:	CHAMBERSBURG SUBSTATION	COORDINATES:	
SITE:	FRANKLIN COUNTY, PENNSYLVANIA	STATION:	
COMM. NO.:	H20124 START DATE: 8.27.2020	ELEVATION:	624+/-
DRILLER:	M. STAWAS END DATE: 8.27.2020	LOGGED BY:	J. Mays /C. Shepeck

EQUIPMENT
RIG TYPE: DIETRICH D-50
CORE TYPE: NQ2
CORE SIZE: 2-INCH BARREL TYPE SOLID

DIRECTION OF BORING (measured from vertical)
VERTICAL OR AZIMUTH: VERTICAL

CORE RUN	DEPTH (ft.) From	DEPTH (ft.) To	INCHES CORED	RECOVERY Inches	RECOVERY %	RQD Inches	RQD %	CORING TIME (min.)	NOTES (Core Jam, Water Loss, etc.)
1	1.0	6.0	51	48	84	38	64		water at 1.2' at completion

DESCRIPTION OF ROCK TYPE

DEPTH (ft) From	DEPTH (ft) To	DESCRIPTION (Color, Type of Rock, Weathering, Hardness, Structure, etc.)
0.0	1.0	N=56/2" Grey, gravel and Rock Fragments (GP)
1.0	6.0	Dark grey, slightly weathered, fine grained, SHALE with a silt component,
		closely to widely fractured, medium hard, with slickensides having a secondary mineralization of chlorite
		Bottom of Hole at 6.0'

DESCRIPTION OF JOINTS

	INCLINATION TO CORE AXIS	SHAPE AND ROUGHNESS	COATINGS	FILLING MATERIAL
a				
b				
c				
d				

OTHER DISCONTINUITIES:

HILLIS-CARNES ENGINEERING ASSOCIATES
CORE LOG

PAGE 1 OF 1 BORING NO. B-1

PROJECT:	CHAMBERSBURG SUBSTATION	COORDINATES:	
SITE:	FRANKLIN COUNTY, PENNSYLVANIA	STATION:	
COMM. NO.:	H20124 START DATE: 8.27.2020	ELEVATION:	624+/-
DRILLER:	M. STAWAS END DATE: 8.27.2020	LOGGED BY:	J. Mays /C. Shepeck

EQUIPMENT
RIG TYPE: DIETRICH D-50
CORE TYPE: NQ2
CORE SIZE: 2-INCH BARREL TYPE SOLID

DIRECTION OF BORING (measured from vertical)
VERTICAL OR AZIMUTH: VERTICAL

CORE RUN	DEPTH (ft.) From	DEPTH (ft.) To	INCHES CORED	RECOVERY Inches	RECOVERY %	RQD Inches	RQD %	CORING TIME (min.)	NOTES (Core Jam, Water Loss, etc.)
1	0.5	5.5	60	55.2	92	21.6	36		
2	5.5	10.5	60	60	100	58	96		
3	10.5	15.5	60	60	100	55.2	92		
4	15.5	20.5	60	58	96.6	58	96.6		

DESCRIPTION OF ROCK TYPE

DEPTH (ft) From	DEPTH (ft) To	DESCRIPTION (Color, Type of Rock, Weathering, Hardness, Structure, etc.)
0.5	20.5	Dark grey, slightly weathered, fine grained, SHALE with a silt component,
		closely to widely fractured, medium hard, with slickensides having a secondary mineralization of chlorite
		Bottom of Hole at 20.5'

DESCRIPTION OF JOINTS

	INCLINATION TO CORE AXIS	SHAPE AND ROUGHNESS	COATINGS	FILLING MATERIAL
a				
b				
c				
d				

OTHER DISCONTINUITIES:

HILLIS-CARNES ENGINEERING ASSOCIATES
CORE LOG

PAGE 1 OF 1 BORING NO. B-2

PROJECT:	CHAMBERSBURG SUBSTATION	COORDINATES:	
SITE:	FRANKLIN COUNTY, PENNSYLVANIA	STATION:	
COMM. NO.:	H20124 START DATE: 8.27.2020	ELEVATION:	624+/-
DRILLER:	M. STAWAS END DATE: 8.27.2020	LOGGED BY:	J. Mays /C. Shepeck

EQUIPMENT
RIG TYPE: DIETRICH D-50
CORE TYPE: NQ2
CORE SIZE: 2-INCH BARREL TYPE SOLID

DIRECTION OF BORING (measured from vertical)
VERTICAL OR AZIMUTH: VERTICAL

CORE RUN	DEPTH (ft.) From	DEPTH (ft.) To	INCHES CORED	RECOVERY Inches	RECOVERY %	RQD Inches	RQD %	CORING TIME (min.)	NOTES (Core Jam, Water Loss, etc.)
1	1.0	6.0	60	60	100	40.2	69		water at 1.2' at completion
2	6.0	11.0	60	60	100	39	65		

DESCRIPTION OF ROCK TYPE

DEPTH (ft.) From	DEPTH (ft.) To	DESCRIPTION (Color, Type of Rock, Weathering, Hardness, Structure, etc.)
0.0	1.0	N=50/5" Gray hard sandy silt, gravel and rock fragments
1.0	11.0	Dark grey, slightly weathered, fine grained, SHALE with a silt component,
		closely to widely fractured, medium hard, with slickensides having a secondary mineralization of chlorite
		Bottom of Hole at 11'

DESCRIPTION OF JOINTS

	INCLINATION TO CORE AXIS	SHAPE AND ROUGHNESS	COATINGS	FILLING MATERIAL
a				
b				
c				
d				

OTHER DISCONTINUITIES:

HILLIS-CARNES ENGINEERING ASSOCIATES
CORE LOG

PAGE 1 OF 1 BORING NO. B-3

PROJECT:	CHAMBERSBURG SUBSTATION	COORDINATES:	
SITE:	FRANKLIN COUNTY, PENNSYLVANIA	STATION:	
COMM. NO.:	H20124 START DATE: 8.26.2020	ELEVATION:	624+/-
DRILLER:	M. STAWAS END DATE: 8.26.2020	LOGGED BY:	J. Mays /C. Shepeck

EQUIPMENT
RIG TYPE: DIETRICH D-50
CORE TYPE: NQ2
CORE SIZE: 2-INCH BARREL TYPE SOLID

DIRECTION OF BORING (measured from vertical)
VERTICAL OR AZIMUTH: VERTICAL

CORE RUN	DEPTH (ft.) From	DEPTH (ft.) To	INCHES CORED	RECOVERY Inches	RECOVERY %	RQD Inches	RQD %	CORING TIME (min.)	NOTES (Core Jam, Water Loss, etc.)
1	2.0	7.0	60	53	88	45	75		
2	7.0	12.0	60	60	100	56	93.3		

DESCRIPTION OF ROCK TYPE

DEPTH (ft) From	DEPTH (ft) To	DESCRIPTION (Color, Type of Rock, Weathering, Hardness, Structure, etc.)
0.0	2.0	N=67/11" Gray, damp, very dense silty Gravel and Rock Fragments
2.0	12.0	Dark grey, slightly weathered, fine grained, SHALE with a silt component,
		closely to widely fractured, hard, with slickensides having a secondary mineralization of chlorite
		Bottom of Hole at 12.0'

DESCRIPTION OF JOINTS

	INCLINATION TO CORE AXIS	SHAPE AND ROUGHNESS	COATINGS	FILLING MATERIAL
a				
b				
c				
d				

OTHER DISCONTINUITIES:

Date Prepared: September 24, 2020

HILLIS-CARNES
ENGINEERING ASSOCIATES

1660 Bowman Farm Road, Suite 105
Frederick, MD 21701
Phone (301) 662-2522
Fax (301) 662-5575
www.hcea.com

Jay Waller
Preston Waller & Associates
4510 Coulbourn Road
Salisbury, MD 21804

☎ 410-546-2861
✉ plwaller@comcast.net

Re: Laboratory Results
Chambersburg Substation
HCEA Frederick Project Number: 13999A
HCEA Hagerstown Project Number: H20124

Laboratory Results

Sample Location	Sample Number	Minimum Resistivity
Off-site GAB from SGI Charmian Quarry	0821	15,000 ohm-cm

Sincerely,
HILLIS-CARNES ENGINEERING ASSOCIATES, INC.

Larry R. Miller
lmiller@hcea.com

HILLIS-CARNES ENGINEERING ASSOCIATES, Inc.

10228 Governor Lane Blvd., Williamsport, Maryland 21795
Phone: (301)582-4662 • Fax: (301)582-4614

Description of Soils – per ASTM D2487

Major Component	Component Type	Component Description	Symbol	Group Name
Coarse-Grained Soils, More than 50% is retained on the No. 200 sieve	**Gravels** – More than 50% of the coarse fraction is retained on the No. 4 sieve. Coarse = 1" to 3" Medium = ½" to 1" Fine = ¼" to ½"	Clean Gravels <5% Passing No. 200 sieve	**GW**	Well Graded Gravel
			GP	Poorly Graded Gravel
		Gravels with fines, >12% Passing the No. 200 sieve	**GM**	Silty Gravel
			GC	Clayey Gravel
	Sands – More than 50% of the coarse fraction passes the No. 4 sieve. Coarse = No.10 to No.4 Medium = No. 10 to No. 40 Fine = No. 40 to No. 200	Clean Sands <5% Passing No. 200 sieve	**SW**	Well Graded Sand
			SP	Poorly Graded Sand
		Sands with fines, >12% Passing the No. 200 sieve	**SM**	Silty Sand
			SC	Clayey Sand
Fine Grained Soils, More than 50% passes the No. 200 sieve	Silts and Clays Liquid Limit is less than 50 Low to medium plasticity	Inorganic	**ML**	Silt
			CL	Lean Clay
		Organic	**OL**	Organic silt
				Organic Clay
	Silts and Clays Liquid Limit of 50 or greater Medium to high plasticity	Inorganic	**MH**	Elastic Silt
			CH	Fat Clay
		Organic	**OH**	Organic Silt
				Organic Clay
Highly Organic Soils	Primarily Organic matter, dark color, organic odor		**PT**	Peat

Proportions of Soil Components

Component Form	Description	Approximate percent by weight
Noun	Sand, Gravel, Silt, Clay, etc.	50% or more
Adjective	Sandy, silty, clayey, etc.	35% to 49%
Some	Some sand, some silt, etc.	12% to 34%
Trace	Trace sand, trace mica, etc.	1% to 11%
With	With sand, with mica, etc.	Presence only

Particle Size Identification

Particle Size	Particle dimension
Boulder	12" diameter or more
Cobble	3" to 12" diameter
Gravel	¼" to 3" diameter
Sand	0.005" to ¼" diameter
Silt/Clay (fines)	Cannot see particle

Cohesive Soils

Field Description	Consistency
Easily Molded in Hands	Very Soft
Easily penetrated several inches by thumb	Soft
Penetrated by thumb with moderate effort	Medium
Penetrated by thumb with great effort	Stiff
Indented by thumb only with great effort	Hard

Granular Soils

No. of SPT Blows/ft	Relative Density
0 – 4	Very Loose
5 – 10	Loose
11 – 30	Medium Dense
31 – 50	Dense
Greater than 50	Very Dense

Other Definitions:

- **Fill:** Encountered soils that were placed by man. Fill soils may be controlled (engineered structural fill) or uncontrolled fills that may contain rubble and/or debris.
- **Saprolite**: Soil material derived from the in-place chemical and physical weathering of the parent rock material. May contain relic structure. Also called residual soils. Occurs in Piedmont soils, found west of the fall line.
- **Disintegrated Roc**k: Residual soil material with rock-like properties, very dense, N = 60 to 51/0".
- **Karst:** Descriptive term which denotes the potential for solutioning of the limestone rock and the development of sinkholes.
- **Alluvium:** Recently deposited soils placed by water action, typically stream or river floodplain soils.
- **Groundwater Level**: Depth within borehole where water is encountered either during drilling, or after a set period of time to allow groundwater conditions to reach equilibrium.
- **Caved Depth:** Depth at which borehole collapsed after removal of augers/casing. Indicative of loose soils and/or groundwater conditions.

Borough of Chambersburg

Chambersburg, PA

Commerce Solar Substation

FOR-BID-ONLY Foundation Drawing Set

Drawing No.	Description
2800-2001BL	General Notes
2800-2002BL	Substation Foundation Layout
2800-2003BL	Transformer Foundation Details
2800-2004BL	Transformer Foundation Waterstop Details
2800-2005BL	Transformer Foundation CMP Installation Details
2800-2006BL	Pier Foundation Details
2800-2006ABL	Anchor Bolt Details
2800-2007BL	Breaker Foundation Details

S. Jay Waller Digitally signed by S. Jay Waller Date: 2020.10.02 11:31:42 -04'00'

COMMONWEALTH OF PENNSYLVANIA REGISTERED PROFESSIONAL SCOTT J. WALLER ENGINEER No. PE067824

Preston Waller & Associates, Inc.
Process & Engineering Consultants

GENERAL STRUCTURAL NOTES

A. BUILDING CODES AND STANDARDS

1. THE FOLLOWING CODES AND STANDARDS, INCLUDING ALL SPECIFICATIONS REFERENCED WITHIN, SHALL APPLY TO THE DESIGN, CONSTRUCTION AND QUALITY CONTROL OF ALL WORK PERFORMED ON THE PROJECT.
   a. "INTERNATIONAL BUILDING CODE – 2015" INTERNATIONAL CODE COUNCIL, INC.

   b. "MINIMUM DESIGN LOADS FOR BUILDINGS AND OTHER STRUCTURES", (ANSI/ASCE 7) AMERICAN SOCIETY OF CIVIL ENGINEERS.

2. ADDITIONAL OR ALTERNATE DESIGN STANDARDS FOR MATERIALS SHALL BE FOUND IN THE TATMAN ASSOCIATES, INC.. STRUCTURAL CALCULATIONS. SEE THOSE CALCULATIONS FOR THE APPLICABLE CODES. 2

B. DESIGN LOADS

1. PIER LOADS – REFERNCE TATMAN ASSOCIATES, INC. STRUCTURAL CALCULATIONS

2. TRANSFORMER LOAD – 80 KIPS

3. HV BREAKER LOAD – 6 KIPS

4. LV BREAKER LOAD – 4 KIPS

3. LATERAL LOADS – WIND
   a. BASIC WIND SPEED (3 SECOND GUST) 120 MPH
   b. MAIN WIND-FORCE RESISTING SYSTEM EXPOSURE C
   c. COMPONENTS AND CLADDING EXPOSURE C
   DESIGN IN ACCORDANCE WITH THE APPLICABLE PORTIONS OF ASCE 7 SECTION 6 AND IBC SECTION 1609

4. LATERAL LOADS – SEISMIC
   a. SEISMIC IMPORTANCE FACTOR (Ie) 1.5
   b. OCCUPANCY CATEGORY IV
   c. SPECTRAL RESPONSE ACCELERATION FOR SHORT PERIOD (Ss) 0.124
   d. SPECTRAL RESPONSE ACCELERATION FOR 1-SECOND PERIOD (SI) 0.051
   e. SPECTRAL RESPONSE COEFFICIENT (SDS) 0.132
   f. SPECTRAL RESPONSE COEFFICIENT (SD1) 0.082
   g. SITE CLASS D
   h. SEISMIC DESIGN CATEGORY C
   i. BASIC SEISMIC FORCE RESISTING SYSTEM(S) ORDINARY REINFORCED CONCRETE
   j. SEISMIC RESPONSE COEFFICIENT(S) (Cs) 0.099
   k. RESPONSE MODIFICATION FACTOR(S) (R) 2.0
   l. ANALYSIS PROCEDURE EQUIVALENT LATERAL FORCE PROCEDURE

7. THE STRUCTURE HAS BEEN DESIGNED FOR THE DEAD, LIVE AND LATERAL LOADS INDICATED ABOVE. ANY INCREASE OF LOADS DUE TO CHANGE IN USAGE OR CONSTRUCTION MATERIALS, ETC. SHALL HAVE THE WRITTEN APPROVAL OF THE ENGINEER. THE CONTRACTOR IS CAUTIONED AS TO NOT STORE ANY CONSTRUCTION MATERIALS OR UNDERTAKE ANY CONSTRUCTION OPERATIONS WHICH WILL EXCEED THE DESIGN LIVE LOAD CAPACITIES NOTED.

C. CONSTRUCTION

1. GENERAL
   a. THESE DRAWINGS REPRESENT THE COMPLETED PROJECT WHICH HAS BEEN DESIGNED FOR THE STRUCTURE DEAD LOADS AND FOR THE SUPERIMPOSED LIVE LOADS INDICATED IN THE DESIGN LOADS. IT IS THE CONTRACTOR'S RESPONSIBILITY TO DETERMINE ALLOWABLE CONSTRUCTION LOADS AND TO PROVIDE PROPER DESIGN AND CONSTRUCTION OF FALSEWORK, FORMWORK, TEMPORARY BRACING, SHEETING AND SHORING, ETC.

   b. IMPLEMENTING JOB SITE SAFETY AND CONSTRUCTION PROCEDURES ARE THE SOLE RESPONSIBILITY OF THE CONTRACTOR.

   c. IN CASE OF CONFLICT BETWEEN THE GENERAL NOTES, SPECIFICATIONS AND DRAWINGS, THE MOST RIGID REQUIREMENT SHALL GOVERN.

   d. THE EQUIPMENT DRAWINGS SHALL BE USED IN CONJUNCTION WITH THE STRUCTURAL DRAWINGS FOR DIMENSIONS, ELEVATIONS, SECTIONS AND DETAILS AS REQUIRED. REPORT DISCREPANCIES IMMEDIATELY TO THE ENGINEER.

   e. THE CONTRACTOR SHALL CHECK AND VERIFY DIMENSIONS FOR ALL WORK BEFORE PROCEEDING WITH THE CONSTRUCTION. ALL DISCREPANCIES SHALL BE BROUGHT TO THE ATTENTION OF THE ENGINEER PRIOR TO THE START OF ANY WORK.

   f. CONSULT EQUIPMENT AND MEP DRAWINGS FOR VERIFICATION OF LOCATION AND SIZE OF ALL OPENINGS, SLEEVES, REVEALS, DEPRESSIONS, INSERTS, CONCRETE HOUSEKEEPING PADS, HANDRAILS, GUARDRAILS, PARTITION SUPPORTS, LINTELS, ETC. REQUIRED FOR THE PROJECT. VERIFY REQUIREMENTS OF TRADES AFFECTING THE WORK AND NOTIFY THE ENGINEER OF ANY CONFLICTS.

   g. WORK NOT INCLUDED ON THE DRAWINGS BUT IMPLIED TO BE SIMILAR TO THAT SHOWN AT CORRESPONDING PLACES ELSEWHERE ON THE DRAWINGS SHALL BE REPEATED.

   h. ALL COSTS OF INVESTIGATION AND/OR REDESIGN, DUE TO THE CONTRACTOR'S MIS-LOCATION OF STRUCTURAL ELEMENTS OR OTHER LACK OF CONFORMANCE WITH THE PROJECT DOCUMENTS, SHALL BE AT THE CONTRACTOR'S EXPENSE.

   n. ALL EXPANSION BOLTS AND ADHESIVE ANCHORS SHALL BE SET IN FULLY CURED CONCRETE OR 100% GROUT FILLED MASONRY.

   o. WHEN INSTALLING EXPANSION BOLTS OR ADHESIVE ANCHORS, THE CONTRACTOR SHALL TAKE MEASURES TO AVOID DRILLING OR CUTTING OF ANY EXISTING REINFORCING AND DESTRUCTION OF CONCRETE. HOLES SHALL BE BLOWN CLEAN PRIOR TO PLACING BOLTS OR ADHESIVE ANCHORS.

   p. STRUCTURAL COMPONENTS ARE NOT DESIGNED FOR VIBRATORY EQUIPMENT. PLACE VIBRATORY EQUIPMENT ON VIBRATION ISOLATORS APPROPRIATE FOR EQUIPMENT AND USE OF SPACE. VIBRATION ISOLATION HAS NOT BEEN PROVIDED BY THE ENGINEER.

D. FOUNDATION

1. DESIGN DATA
   a. FOUNDATIONS HAVE BEEN DESIGNED IN ACCORDANCE WITH THE GEOTECHNICAL REPORT PREPARED BY HILLIS-CARNES DATED SEPTEMBER 2020.

   b. ALL FOUNDATIONS HAVE BEEN DESIGNED FOR AN ASSUMED ALLOWABLE NET BEARING PRESSURE OF 4000 PSF. IT SHALL BE THE CONTRACTOR'S RESPONSIBILITY TO SECURE AND PAY FOR THE SERVICES OF A GEOTECHNICAL ENGINEER FOR FIELD VERIFICATION OF THE ASSUMED SOIL BEARING PRESSURES. BEARING CAPACITY OF THE SOIL SHALL BE INSPECTED AND APPROVED BY THE GEOTECHNICAL ENGINEER IMMEDIATELY PRIOR TO CONCRETE PLACEMENT. SHOULD THE SOIL BEARING PRESSURE BE FOUND TO BE LESS THAN 4000 PSF, THE CONTRACTOR SHALL IMMEDIATELY NOTIFY THE STRUCTURAL ENGINEER.

   c. ALL EXTERIOR FOUNDATIONS SHALL BEAR A MINIMUM OF 3'-0" BELOW FINISHED GRADE. IN CASE OF CONFLICT, NOTIFY THE STRUCTURAL ENGINEER IN ADVANCE OF ANY CONSTRUCTION TO ALLOW FOR ADJUSTMENT. FOOTINGS SHALL BEAR ON APPROVED UNDISTURBED MATERIAL OR STRUCTURAL FILL.

2. GENERAL
   a. SEE THE PROJECT SPECIFICATIONS AND GEOTECHNICAL ENGINEERING REPORT FOR EXCAVATION AND SUBGRADE PREPARATION REQUIREMENTS, INCLUDING COMPACTION PROCEDURES. REQUIREMENTS CONTAINED IN THE GEOTECHNICAL ENGINEERING REPORT ARE PART OF THIS WORK.

   b. ALL EXCAVATION, BACKFILLING AND STRUCTURAL FILL PLACEMENT OPERATIONS BENEATH THE BUILDING SLAB AND FOUNDATIONS, AND ALL COMPACTION TESTS AND INSPECTIONS SHALL BE DONE UNDER THE DIRECTION AND SUPERVISION OF A REGISTERED PROFESSIONAL SOILS ENGINEER. ALL FILL MATERIAL, COMPACTION EQUIPMENT AND PROCEDURES SHALL BE APPROVED BY THE GEOTECHNICAL ENGINEER PRIOR TO PERFORMING ANY EARTHWORK OPERATIONS.

   c. CONCRETE FOR FOUNDATIONS SHALL BE PLACED ON THE SAME DAY SUBGRADE APPROVAL IS GIVEN BY THE GEOTECHNICAL ENGINEER. SHOULD THE SOIL BEARING PRESSURE BE FOUND TO BE LESS THAN THE ALLOWABLE BEARING PRESSURES LISTED ABOVE, THE CONTRACTOR SHALL IMMEDIATELY NOTIFY THE STRUCTURAL ENGINEER PRIOR TO PROCEEDING WITH THE WORK.

   d. THE CONTRACTOR SHALL VERIFY ALL EXISTING FIELD CONDITIONS THAT MAY AFFECT THE INSTALLATION OF THE FOUNDATION SYSTEM AS SHOWN PRIOR TO STARTING WORK.

   e. THE CONTRACTOR SHALL BE RESPONSIBLE FOR LOCATING AND PROTECTING ALL EXISTING UTILITIES, EXISTING STRUCTURES, ETC., WHETHER INDICATED OR NOT, WHICH MAY BE AFFECTED BY THE CONSTRUCTION PROCESS. SHOULD ANY DAMAGE TO SUCH UTILITIES OCCUR, THE CONTRACTOR SHALL BE REQUIRED TO REPAIR SUCH DAMAGE AT HIS OWN EXPENSE AND TO THE SATISFACTION OF THE OWNER.

   f. UTILITY LINES SHALL NOT BE PLACED THROUGH OR BELOW FOUNDATIONS WITHOUT THE STRUCTURAL ENGINEER'S APPROVAL. STEP FOUNDATIONS AS REQUIRED WHERE UTILITIES ENTER OR EXIT THE BUILDING.

   g. ALL SHORING, SHEETING AND DEWATERING SHALL BE THE RESPONSIBILITY OF THE CONTRACTOR. THE CONTRACTOR SHALL ENGAGE AN ENGINEER REGISTERED IN THE PROJECT'S JURISDICTION TO DESIGN ALL SHEETING AND SHORING.

3. BACKFILL
   a. ALL BACKFILL OPERATIONS SHALL BE PERFORMED IN MAX. 6" HORIZONTAL LIFTS USING STRUCTURAL FILL MATERIAL APPROVED BY THE GEOTECHNICAL ENGINEER, AT THE OPTIMUM MOISTURE CONTENT OF THE MATERIAL AND PROVIDING THE MINIMUM COMPACTION LEVEL STIPULATED IN THE GEOTECHNICAL ENGINEERING REPORT.

   b. FILL MATERIAL SHALL BE PROCURED FROM SUITABLE LOCAL SOURCE – WITHIN A 30 MILE RADIUS OF THE CONSTRUCTION SITE.

   c. THE CONTRACTOR WILL ENGAGE AN INDEPENDENT TESTING AND INSPECTION AGENCY TO PROVIDE SERVICES AS INDICATED BELOW AND SUBMIT REPORTS TO THE OWNER AND TO THE ENGINEER:

      1) ASSESSMENT OF FILL MATERIAL FOR COMPLIANCE WITH GEOTECHNICAL REPORT REQUIREMENTS <u>PRIOR TO PLACEMENT</u>:
         a) MAXIMUM RESISTIVITY < 200 OHM-CM PER ASTM G57
         b) MINIMUM DENSITY >= 120 PCF PER ASTM METHODS
         c) OTHER ATTRIBUTES AS REQUIRED BY THE GEOTECHNICAL REPORT

      2) IN-PLACE TESTING OF FILL MATERIAL AFTER PLACEMENT OF 24" DEPTH OF BACKFILL <u>AND PRIOR TO PLACEMENT OF GROUND GRID CONDUCTOR</u>:
         a) MAXIMUM RESISTIVITY PER ASTM G57 IN TWO (2) NON-ADJACENT LOCATIONS.
         b) (3) – SOIL COMPACTION TESTS PER ASTM MANUAL 70 IN AREAS ADJACENT TO FOUNDATIONS H6, T1, AND L2

      3) IN-PLACE TESTING OF FILL MATERIAL AFTER PLACEMENT OF BACKFILL <u>AND PRIOR TO PLACEMENT OF AGGREGATE</u>:
         a) (3) – SOIL COMPACTION TESTS PER ASTM MANUAL 70 IN AREAS ADJACENT TO FOUNDATIONS H6, T1, AND L2

2

E. CAST-IN-PLACE CONCRETE

1. ALL CONCRETE WORK SHALL CONFORM TO ALL PROVISIONS OF THE FOLLOWING PUBLICATIONS:
   a. "SPECIFICATIONS FOR STRUCTURAL CONCRETE FOR BUILDINGS", ACI 301.

   b. "BUILDING CODE REQUIREMENTS FOR REINFORCED CONCRETE", ACI 318.

   c. "RECOMMENDED PRACTICE FOR HOT WEATHER CONCRETING", ACI 305.

   d. "RECOMMENDED PRACTICE FOR COLD WEATHER CONCRETING", ACI 306.

   e. "RECOMMENDED PRACTICE FOR CONCRETE FORMWORK", ACI 347.

2. MATERIALS
   a. CONCRETE SHALL HAVE THE FOLLOWING MINIMUM PROPERTIES:

<u>APPLICATION</u>	<u>f'c AT 28 DAYS</u>	DRY UNIT <u>WEIGHT PCF</u>	MAXIMUM WATER/ <u>CEMENT RATIO</u>
FOUNDATIONS	4,000	145	0.50

   b. CEMENT ASTM C150, TYPE I OR II OR V

   c. CEMENT SUBSTITUTES ASTM C595, ASTM C989, ASTM C618 (CLASS C OR F)
      MAXIMUM PERCENT OF TOTAL IN ACCORDANCE WITH ACI 318 TABLE 4.2.3

   d. COARSE AGGREGATES MAXIMUM COARSE AGGREGATE SIZE SHALL BE 1"
      ASTM C33 (NORMAL WEIGHT)

   e. AIR: ALL CONCRETE EXPOSED TO WEATHER, EXCEPT CONCRETE TO RECEIVE A STEEL TROWEL FINISH, SHALL BE AIR-ENTRAINED 6% ± 1 1/2% BY VOLUME. ENTRAINING ADMIXTURES TO COMPLY WITH C260.

   f. REINFORCEMENT:
      DEFORMED REINFORCING BARS ASTM A615, GRADE 60

   g. ADMIXTURES: NO ADMIXTURE CONTAINING CALCIUM CHLORIDE OR OTHER CHLORIDE CONTAINING AGENTS SHALL BE PERMITTED.

   h. SUBMIT CONCRETE DESIGN MIXES FOR ALL CLASSES OF CONCRETE TO THE STRUCTURAL ENGINEER FOR REVIEW PRIOR TO PLACING ANY CONCRETE.

3. GENERAL
   a. REINFORCING STEEL CLEAR COVER SHALL BE AS FOLLOWS UNLESS NOTED OTHERWISE ON THE DRAWINGS:
      CONCRETE CAST AGAINST AND PERMANENTLY EXPOSED TO EARTH: 3"

      CONCRETE EXPOSED TO WEATHER OR IN CONTACT WITH GROUND:
      #6 BARS AND LARGER 2"
      #5 BARS AND SMALLER 2"

   b. UNLESS DETAILED OTHERWISE, SPLICES SHALL BE MADE BY CONTACT TENSION LAP SPLICES. MINIMUM LAP TO BE 44 BAR DIAMETERS FOR #6 BARS AND SMALLER, 70 BAR DIAMETERS FOR #7 AND #8 BARS, OR 24 INCHES WHICHEVER IS GREATER. SEE DRAWINGS FOR LAP SPLICE REQUIREMENTS FOR #9 BARS AND LARGER. LAP BARS CONTINUOUS AROUND CORNERS. DOWEL INTERSECTING WALLS INTO CROSS WALLS.

   c. NO WELDING OF REINFORCING SHALL BE PERMITTED UNLESS SPECIFICALLY CALLED FOR OR APPROVED BY THE STRUCTURAL ENGINEER. WHERE WELDING OF REINFORCING STEEL IS REQUIRED, PROVIDE BARS CONFORMING TO ASTM A706. ALL WELDING PROCEDURES SHALL CONFORM WITH THE REQUIREMENTS OF AWS D1.4.

   d. PROVIDE PLASTIC TIPPED BOLSTERS AND CHAIRS AT ALL LOCATIONS WHERE THE CONCRETE SURFACE IS EXPOSED.

   e. ALL CONCRETE SURFACES SHALL BE MOIST-CURED OR PROTECTED USING A LIQUID MEMBRANE CURING AGENT MEETING THE REQUIREMENTS OF ASTM C309 APPLIED AS SOON AS FORMS ARE REMOVED OR FINISHING IS COMPLETED TO PREVENT EARLY DRYING OF THE CONCRETE AND TO PROVIDE ADEQUATE CURING FOR A MINIMUM OF 7 DAYS.

   f. ALL FORMWORK, SHORING, AND RESHORING, SHALL BE DESIGNED BY THE CONTRACTOR'S ENGINEER REGISTERED IN THE PROJECT'S JURISDICTION.

   g. NO SLEEVES SHALL BE PLACED THROUGH ANY CONCRETE ELEMENT UNLESS SHOWN ON THE STRUCTURAL DRAWINGS, APPROVED SLEEVING SHOP DRAWINGS OR SPECIFICALLY AUTHORIZING IN WRITING BY THE STRUCTURAL ENGINEER.

   h. CORE DRILLING OF FOUNDATIONS, BEAMS, JOISTS, SLABS OR COLUMNS SHALL NOT BE PERMITTED UNLESS AUTHORIZED IN WRITING BY THE STRUCTURAL ENGINEER.

   i. WHEN INSTALLING EXPANSION BOLTS OR ADHESIVE ANCHORS, THE CONTRACTOR SHALL TAKE MEASURES TO AVOID DRILLING OR CUTTING OF ANY EXISTING REINFORCING AND DESTRUCTION OF CONCRETE. HOLES SHALL BE BLOWN CLEAN PRIOR TO PLACING BOLTS OR ADHESIVE ANCHORS.

   j. CHAMFER ALL EXPOSED CONCRETE CORNERS, 3/4"x3/4" MINIMUM, UNLESS NOTED OR DETAILED ON THE ARCHITECTURAL DRAWINGS.

   k. IN AREAS WHERE NEW CONCRETE WORK ABUTTS EXISTING FOUNDATIONS, PROVIDE $\frac{1}{2}$" THICK ASPHALT IMPREGNATED EXPANSION/CONTROL JOINT MATERIAL ACROSS ENTIRE SURFACE OR AS DIRECTED BY STRUCTURAL ENGINEER.

4. INSPECTION AND TESTING
   a. THE OWNER SHALL BE RESPONSIBLE FOR INSPECTION OF THE FORMWORK, ANCHOR BOLT PLACEMENT AND REINFORCING STEEL PLACEMENT FOR COMPLIANCE WITH THE CONTRACT DOCUMENTS AND SHOP DRAWINGS.

   b. THE OWNER SHALL BE RESPONSIBLE FOR MONITORING OF ALL STRUCTURAL CONCRETE PLACEMENT FOR CONFORMANCE WITH APPLICABLE ACI REQUIREMENTS.

   c. THE CONTRACTOR WILL ENGAGE AN INDEPENDENT TESTING AND INSPECTION AGENCY TO PROVIDE SERVICES AS INDICATED BELOW AND SUBMIT REPORTS TO THE OWNER AND TO THE ENGINEER.

      1) THE AGENCY SHALL PERFORM ALL TESTING IN CONFORMANCE WITH APPLICABLE ACI REQUIREMENTS.

      2) SAMPLE FRESH CONCRETE IN ACCORDANCE WITH ASTM C172. MOLD TEST CYLINDERS IN ACCORDANCE WITH ASTM C31.

      3) A MINIMUM OF FOUR TEST CYLINDERS SHALL BE CAST FOR EACH DAY'S POUR OR EACH 50 CUBIC YARDS, WHICHEVER RESULTS IN MORE TEST CYLINDERS.

      4) THE AGENCY WILL MAKE ADDITIONAL TESTS OF IN-PLACE CONCRETE AT THE CONTRACTOR'S EXPENSE WHEN THE TEST RESULTS INDICATE SPECIFIED CONCRETE STRENGTHS HAVE NOT BEEN ATTAINED, AS DIRECTED BY THE STRUCTURAL ENGINEER.

2

S. Jay Waller Digitally signed by S. Jay Waller Date: 2020.10.02 11:31:56 -04'00'

DRAWING IS FOR BIDDING PURPOSES ONLY

NOT BE USED FOR ASSEMBLY OR CONSTRUCTION

COMMONWEALTH OF PENNSYLVANIA REGISTERED PROFESSIONAL SCOTT J. WALLER ENGINEER No. PE087524

Preston Waller & Associates, Inc.
Process & Engineering Consultants

NO.	DATE	REVISION	BY
1	09-17-20	ADD TATMAN STRUCTURE REFERENCE INFORMATION	SJW
2	09-30-20	REV. STR. BASIS;ADD BACKFILL TEST;CLARIFY CONC. TEST	SJW
3			
4			
5			
6			
7			
8			
9			

SCALE NTS

DATE	06-30-20
CHECKED BY	SJW
DRAWN BY	SJW

BOROUGH OF CHAMBERSBURG
100 S. SECOND STREET
CHAMBERSBURG, PENNSYLVANIA

COMMERCE SOLAR SUBSTATION
FOR INSTALLATION BID
FOUNDATION SPECIFICATIONS

DRAWING NUMBER
2800-2001BL

FOUNDATION LIST

REFERENCE ID	DESCRIPTION	ELEVATION (FT)
H1–H4	69 KV A–FRAME	624.5
H5–H6	69 KV SWITCH STRUCTURE	624.5
H7	69 KV PT STAND	624.5
H8	69 KV SURGE ARRESTOR STAND	624.5
H9	30 FT LIGHTNING MAST	625
L1–L4	15 KV LOW VOLTAGE STRUCTURE	624.5
A1–A2	YARD LIGHTS	625
B1	69 KV BREAKER	624.5
B2	15 KV BREAKER	624.5
T1	TRANSFORMER & CONTAINMENT STRUCTURE	624.5
N/A	EXISTING SUBSTATION LV STRUCTURE FDNS	623.1

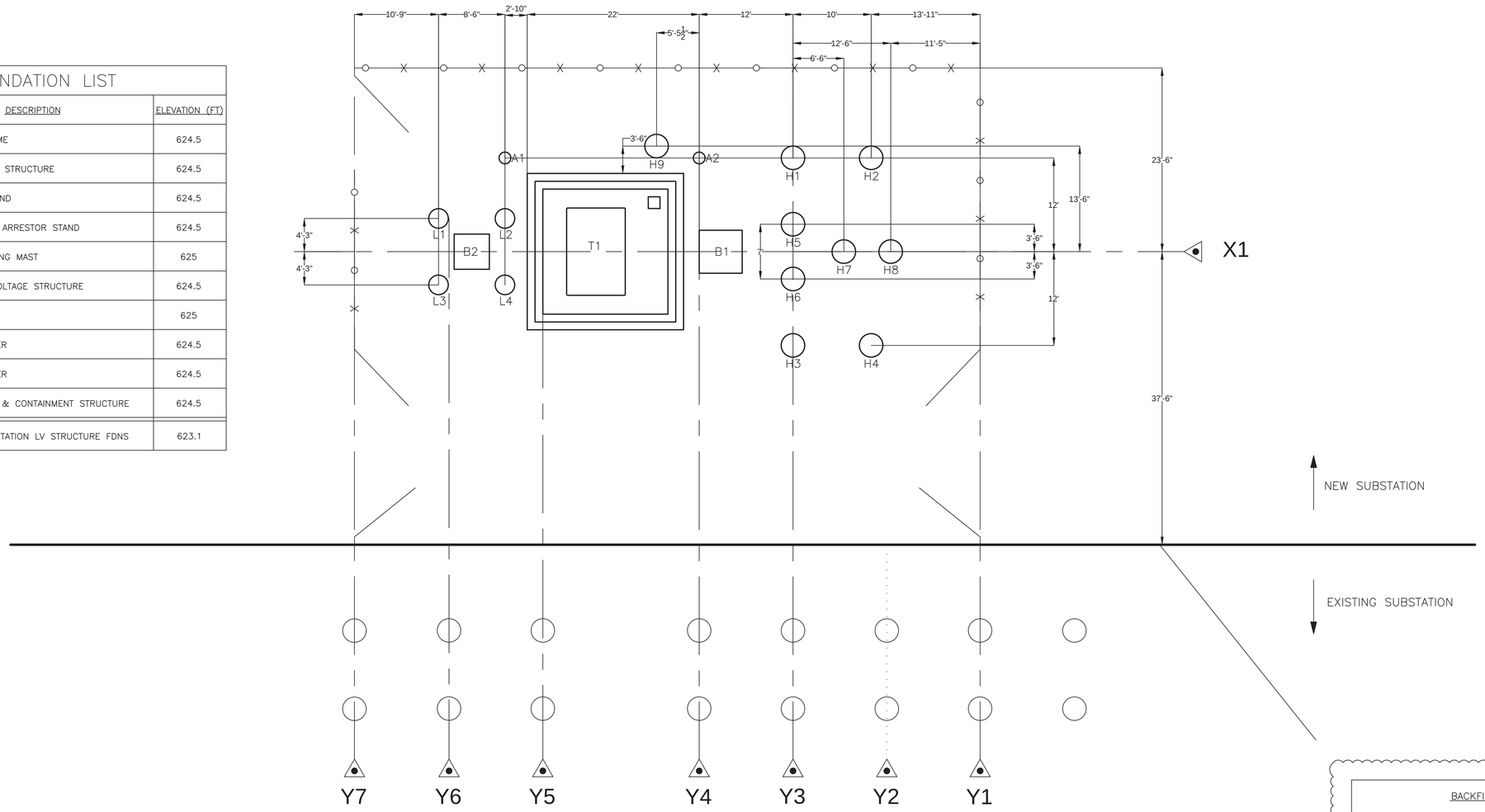

1

BACKFILL ELEVATION DETAIL – NOT TO SCALE

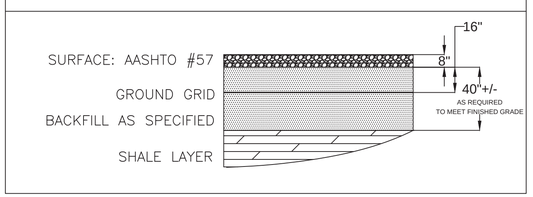

SURFACE ELEVATION TO MATCH FINISHED GRADE SPECIFIED ON SITE PLAN

S. Jay Waller Digitally signed by S. Jay Waller Date: 2020.10.02 11:32:20 -04'00'

DRAWING IS FOR BIDDING PURPOSES ONLY

NOT BE USED FOR ASSEMBLY OR CONSTRUCTION

COMMONWEALTH OF PENNSYLVANIA
REGISTERED PROFESSIONAL
SCOTT J. WALLER
ENGINEER
No. PE067024

Preston Waller & Associates, Inc.
Process & Engineering Consultants

NO.	DATE	REVISION	BY
1	09–30–20	ADDED BACKFILL ELEVATION VIEW	SJW
2			
3			
4			
5			
6			
7			
8			
9			

SCALE 1/8"–1'0"

DATE	06–30–20
CHECKED BY	SJW
DRAWN BY	SJW

BOROUGH OF CHAMBERSBURG
100 S. SECOND STREET
CHAMBERSBURG, PENNSYLVANIA

COMMERCE SOLAR SUBSTATION
FOR INSTALLATION BID
GENERAL FOUNDATION LAYOUT

DRAWING NUMBER
2800–2002BL

FOUNDATION T1

TRANSFORMER PAD AND OIL CONTAINMENT STRUCTURE						
APPROX. AMOUNT OF CONCRETE REQUIRED: 30 CU. YDS.						
ROD	APPROX. LENGTH		QUANTITY REQUIRED	DESCRIPTION OF MATERIAL	BAR NUMBER	WEIGHT (LBS)
	FEET	INCHES				
A	19	6	80	BILLET STEEL A615–82 GRADE 60 DEFORMED BAR	#6	2343
B	19	6	80	BILLET STEEL A615–82 GRADE 60 DEFORMED BAR	#6	2343
C	10	8	28	BILLET STEEL A615–82 GRADE 60 DEFORMED BAR	#4	229
D	6	0	48	BILLET STEEL A615–82 GRADE 60 DEFORMED BAR	#4	226
E	3	7	25	BILLET STEEL A615–82 GRADE 60 DEFORMED BAR	#4	59
F	17	7	48	BILLET STEEL A615–82 GRADE 60 DEFORMED BAR	#4	566
H	6	2	144	BILLET STEEL A615–82 GRADE 60 DEFORMED BAR	#4	595
I	4	6–1/2	42	BILLET STEEL A615–82 GRADE 60 DEFORMED BAR	#4	157
J	5	6	48	BILLET STEEL A615–82 GRADE 60 DEFORMED BAR	#4	177
				TOTAL		6695

* ALL REINFORCING STEEL TO BE SUPPLIED FULL LENGTH TO ELIMINATE LAP LENGTH REQUIREMENT.

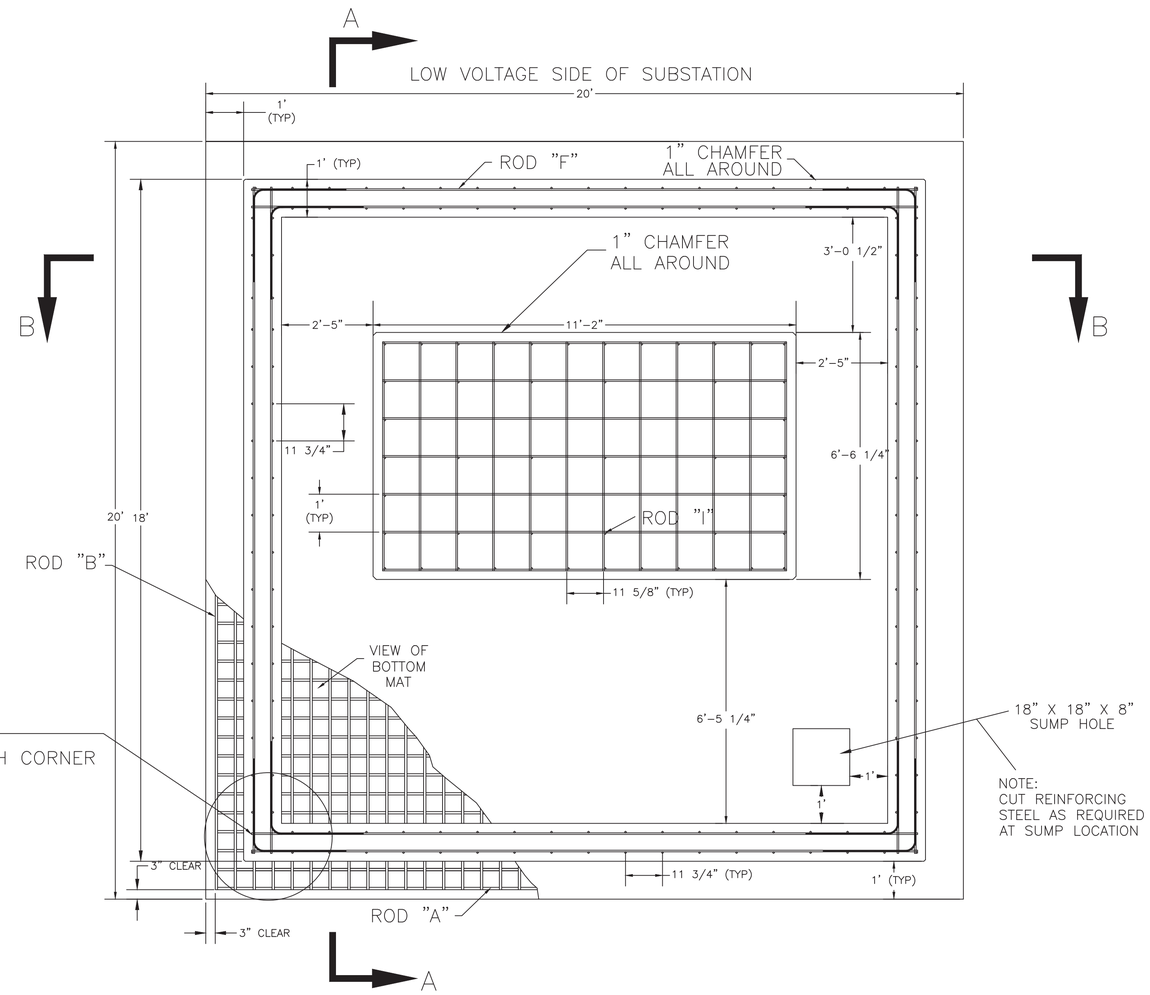

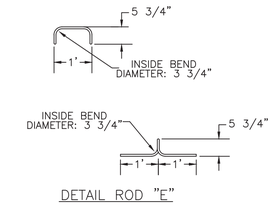

DETAIL ROD "E"

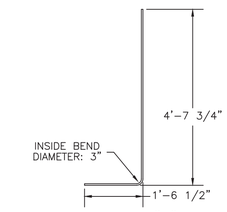

DETAIL ROD "H"

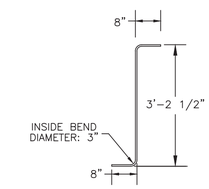

DETAIL ROD "I"

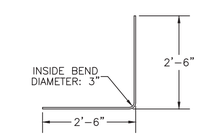

DETAIL ROD "J"

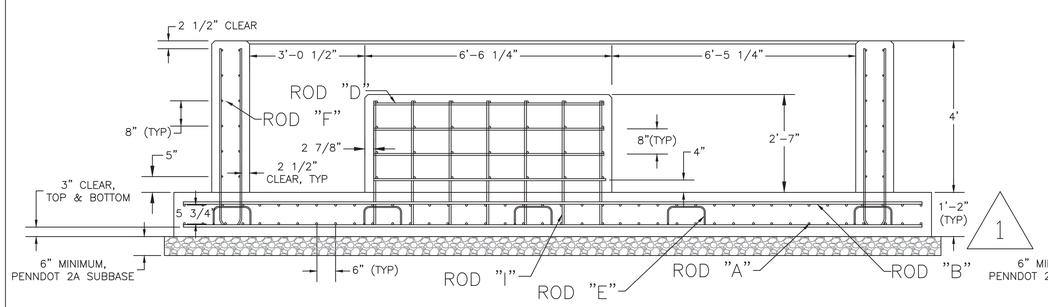

SECTION A–A

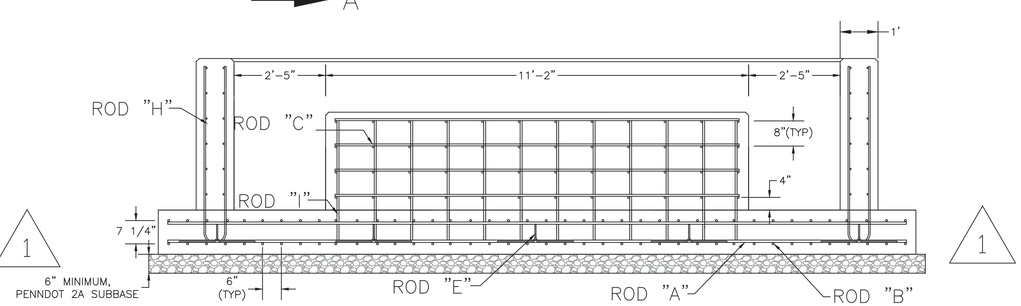

SECTION B–B

S. Jay Waller Digitally signed by S. Jay Waller Date: 2020.10.02 11:32:34 -04'00'

DRAWING IS FOR BIDDING PURPOSES ONLY

NOT BE USED FOR ASSEMBLY OR CONSTRUCTION

COMMONWEALTH OF PENNSYLVANIA REGISTERED PROFESSIONAL ENGINEER SCOTT J. WALLER No. PE-073510-E

Preston Waller & Associates, Inc.
Process & Engineering Consultants

NO.	DATE	REVISION	BY
1	09–30–20	ADD MINIMUM 6" PENNDOT 2A SUBBASE BELOW CONC. MAT	SJW
2			
3			
4			
5			
6			
7			
8			
9			

SCALE 1/2"–1'0"

DATE	07–13–20
CHECKED BY	SJW
DRAWN BY	SJW

BOROUGH OF CHAMBERSBURG
100 S. SECOND STREET
CHAMBERSBURG, PENNSYLVANIA

COMMERCE SOLAR SUBSTATION
TRANSFORMER FOUNDATION DETAIL

DRAWING NUMBER
2800–2003BL

WATERSTOP LAYOUT AND DETAILS

WIRESTOP WATERSTOP MINIMUM QUANTITIES REQUIRED		
WATERSTOP NUMBER	APPROX. LENGTH REQUIRED	PART NUMBER OR JUNCTION SECTION TYPE
1	70'	FR–4316

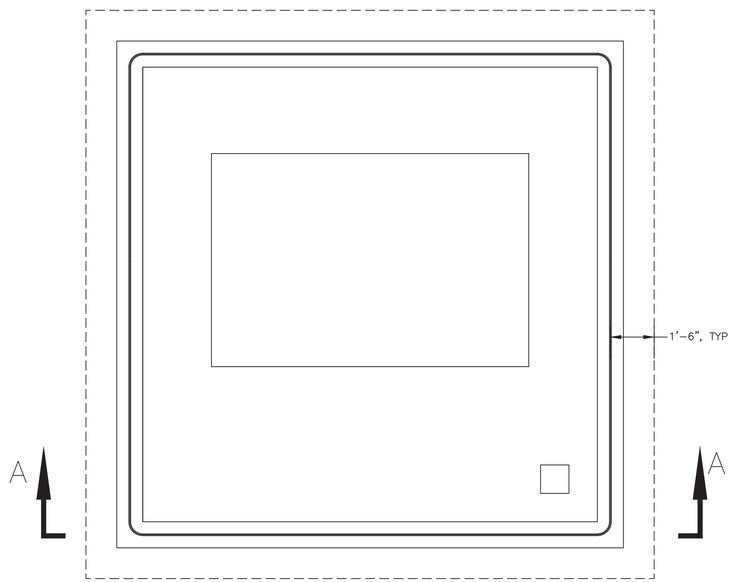

PLAN VIEW

NOT TO SCALE

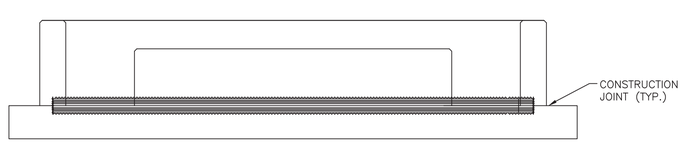

SECTION A–A

NOT TO SCALE

WIRESTOP WATERSTOP DETAIL (PART NO. FR–4316)

NOT TO SCALE

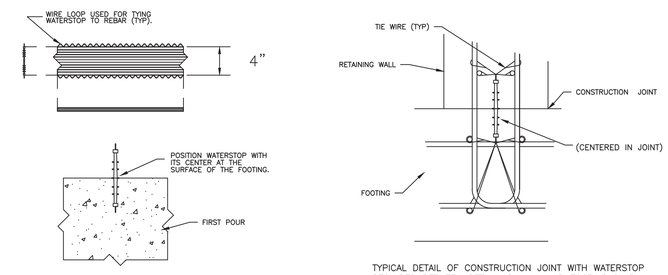

TYPICAL DETAIL OF CONSTRUCTION JOINT WITH WATERSTOP REQUIRED BETWEEN RETAINING WALL AND FOOTING SLAB.

GENERAL NOTES:

1. THE WATERSTOP THAT MUST BE USED THROUGHOUT THIS CONTRACT IS WIRESTOP WATERSTOPS (PART NUMBERS FR–4316) AS MANUFACTURED BY PAUL MURPHY PLASTICS COMPANY, ROSEVILLE, MICHIGAN. NO SUBSTITUTIONS WILL BE ACCEPTED.
2. WATERSTOPS MUST BE CENTERED IN THE JOINT AND INSTALLED IN ACCORDANCE WITH MANUFACTURERS SPECIFICATIONS.
3. USE ONLY THE WIRE LOOPS PROVIDED TO SECURE THE WATERSTOPS TO THE REBAR AND FORMWORK (SECURE A MINIMUM OF EVERY 12").
4. NO HOLES SHALL BE MADE IN THE WATERSTOP.

S. Jay Waller Digitally signed by S. Jay Waller Date: 2020.10.02 11:32:46 -04'00'

DRAWING IS FOR BIDDING PURPOSES ONLY

NOT BE USED FOR ASSEMBLY OR CONSTRUCTION

COMMONWEALTH OF PENNSYLVANIA REGISTERED PROFESSIONAL SCOTT J. WALLER ENGINEER No. PE087524

Preston Waller & Associates, Inc.
Process & Engineering Consultants

NO.	DATE	REVISION	BY
1			
2			
3			
4			
5			
6			
7			
8			
9			

SCALE 1/2"–1'0"

DATE	07–13–20
CHECKED BY	SJW
DRAWN BY	SJW

BOROUGH OF CHAMBERSBURG
100 S. SECOND STREET
CHAMBERSBURG, PENNSYLVANIA

COMMERCE SOLAR SUBSTATION FOR INSTALLATION BID TRANSFORMER FOUNDATION WATERSTOP DETAIL

DRAWING NUMBER
2800–2004BL

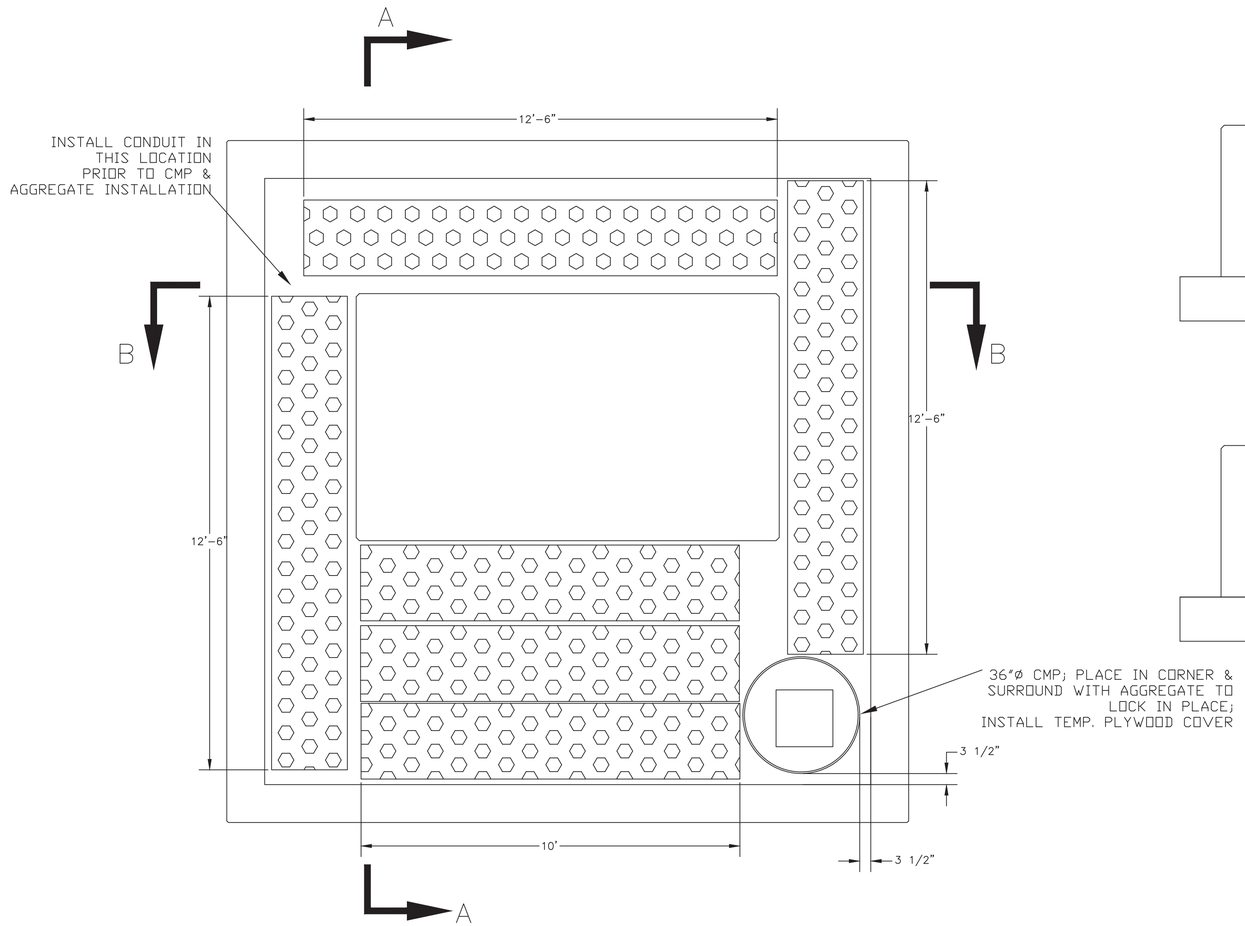

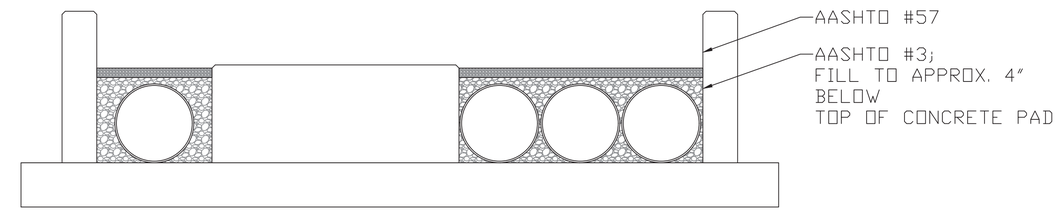

SECTION A–A

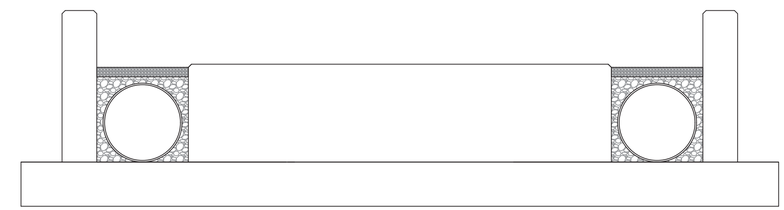

SECTION B–B

UTILIZE CONTECH HEL–COR 14GA GALVANIZED CORRUGATED METAL PIPE WITH STANDARD PERFORATION HOLE LAYOUT PER CONTECH DWG #1008467J

SIZE, QUANTITY AND LENGTH AS FOLLOWS:

24"ø	(3)	12'–6"
24"ø	(3)	10'–0"
36"ø	(1)	2'–6"

CMP ENDPLATE DETAIL

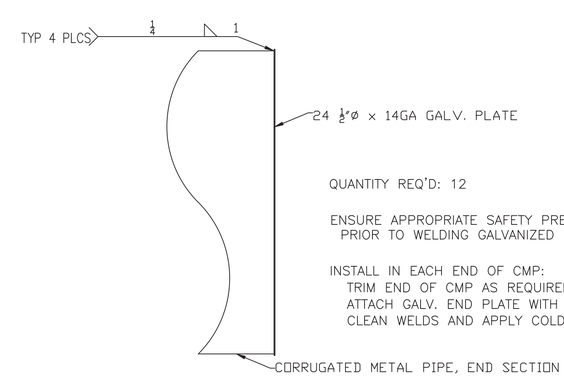

QUANTITY REQ'D: 12

ENSURE APPROPRIATE SAFETY PRECAUTIONS ARE TAKEN PRIOR TO WELDING GALVANIZED MATERIALS

INSTALL IN EACH END OF CMP:
TRIM END OF CMP AS REQUIRED AND APPLY COLD GALVANIZING PAINT TO CUT END
ATTACH GALV. END PLATE WITH FOUR (4) 1" STITCH WELDS EVENLY SPACED
CLEAN WELDS AND APPLY COLD GALVANIZING PAINT TO WELDS

S. Jay Waller Digitally signed by S. Jay Waller Date: 2020.10.02 11:32:57 -04'00'

DRAWING IS FOR BIDDING PURPOSES ONLY

NOT BE USED FOR ASSEMBLY OR CONSTRUCTION

COMMONWEALTH OF PENNSYLVANIA REGISTERED PROFESSIONAL SCOTT J. WALLER ENGINEER No. PE087634

Preston Waller & Associates, Inc.
Process & Engineering Consultants

NO.	DATE	REVISION	BY
1			
2			
3			
4			
5			
6			
7			
8			
9			

SCALE N.T.S.

DATE	07–13–20
CHECKED BY	SJW
DRAWN BY	SJW

BOROUGH OF CHAMBERSBURG
100 S. SECOND STREET
CHAMBERSBURG, PENNSYLVANIA

COMMERCE SOLAR SUBSTATION FOR INSTALLATION BID TRANSFORMER FOUNDATION CMP INSTALLATION DETAIL

DRAWING NUMBER
2800–2005BL

FOUNDATION L1, L2, L3, L4 - LV STRUCTURE FOUNDATION

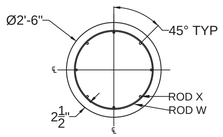

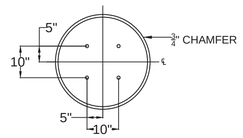

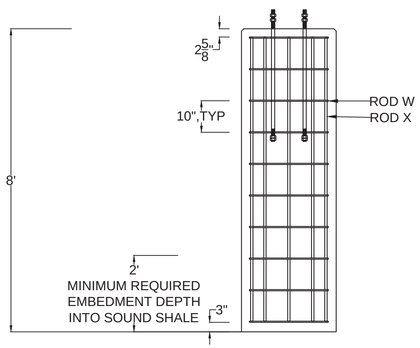

FOUNDATION A1, A2 - LIGHT POLE FOUNDATION

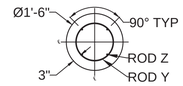

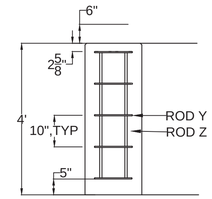

ROD P MINIMUM LAP LENGTH = 10"

SUBSTATION PIER FOUNDATIONS						
REBAR SCHEDULE						
ROD	APPROX. LENGTH		QUANTITY REQUIRED	DESCRIPTION OF MATERIAL	BAR NUMBER	WEIGHT (LBS)
	FEET	INCHES				
P	9	10	10*	BILLET STEEL A615–82 GRADE 60 DEFORMED BAR; MINIMUM LAP = 1'–8"	#3	38
S	7	6–1/2	8*	BILLET STEEL A615–82 GRADE 60 DEFORMED BAR	#6	92
T	9	10	15*	BILLET STEEL A615–82 GRADE 60 DEFORMED BAR; MINIMUM LAP = 1'–8"	#4	67
U	9	9	8*	BILLET STEEL A615–82 GRADE 60 DEFORMED BAR	#6	150
W	8	0	10*	BILLET STEEL A615–82 GRADE 60 DEFORMED BAR; MINIMUM LAP = 1'–6"	#3	32
X	7	6–1/2	8*	BILLET STEEL A615–82 GRADE 60 DEFORMED BAR	#6	92
Y	3	10	5*	BILLET STEEL A615–82 GRADE 60 DEFORMED BAR; MINIMUM LAP = 10"	#3	8
Z	3	9	4*	BILLET STEEL A615–82 GRADE 60 DEFORMED BAR	#3	6

* COUNT/WEIGHT IS PER FOUNDATION

FOUNDATION H1, H2, H3, H4 - A-FRAME FOUNDATION

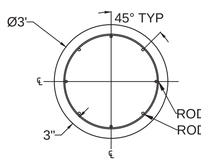

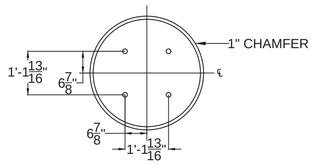

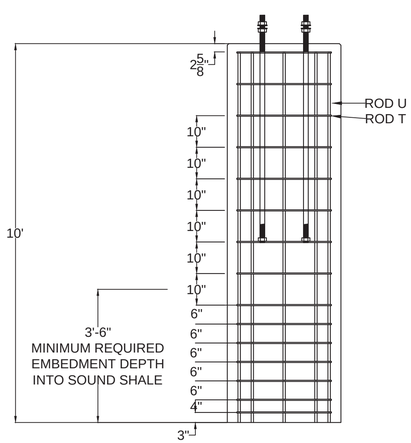

FOUNDATION H5, H6, H7, H8 - SUPPORT STRUCTURE FOUNDATION

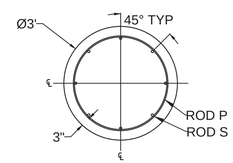

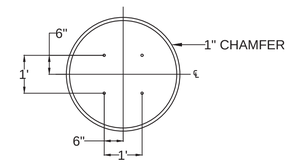

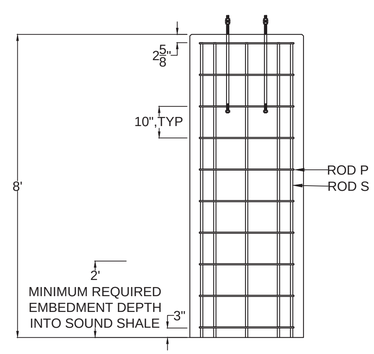

FOUNDATION H9 - LIGHTNING MAST FOUNDATION

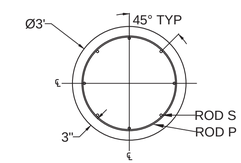

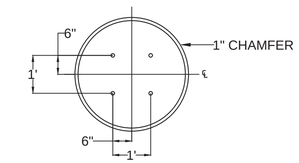

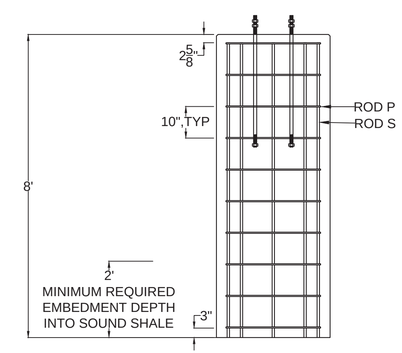

S. Jay Waller Digitally signed by S. Jay Waller Date: 2020.10.02 11:33:09 -04'00'

DRAWING IS FOR BIDDING PURPOSES ONLY

NOT BE USED FOR ASSEMBLY OR CONSTRUCTION

REFERENCE DRAWING 2800–2006ABL FOR ANCHOR BOLT INFORMATION AND DETAILS

COMMONWEALTH OF PENNSYLVANIA REGISTERED PROFESSIONAL SCOTT J. WALLER ENGINEER No. PE087555

Preston Waller & Associates, Inc.
Process & Engineering Consultants

NO.	DATE	REVISION	BY
1	09–17–20	ADD TATMAN ANCHOR BOLT NOTE	SJW
2			
3			
4			
5			
6			
7			
8			
9			

SCALE 1/2"–1'0"

DATE	07–13–20
CHECKED BY	SJW
DRAWN BY	PEG

BOROUGH OF CHAMBERSBURG
100 S. SECOND STREET
CHAMBERSBURG, PENNSYLVANIA

COMMERCE SOLAR SUBSTATION
FOR INSTALLATION BID
PIER FOUNDATION DETAILS

DRAWING NUMBER
2800–2006BL

FOUNDATION H1, H2, H3, H4
A-FRAME ANCHOR BOLT CAGE

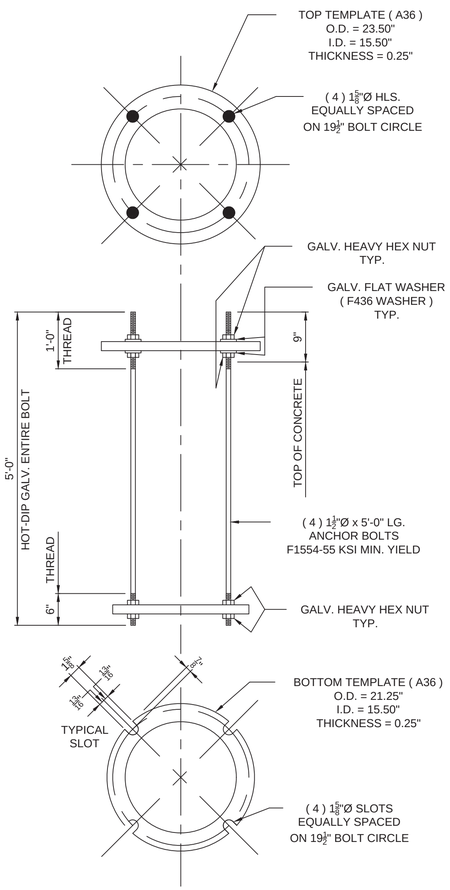

FOUNDATION H9
LIGHTNING MAST ANCHOR BOLT CAGE

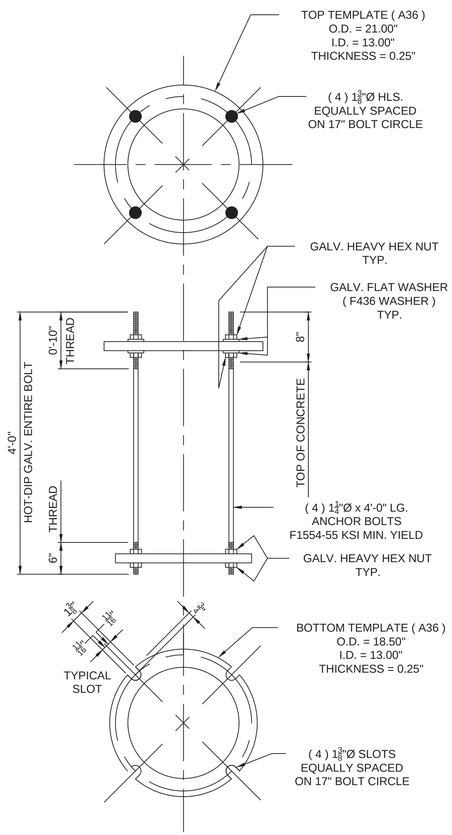

FOUNDATION H5,H6,H7,H8,L1,L2,L3,L4 - ANCHOR BOLT DETAILS

1

FOUNDATION H5,H6,H7,H8 - DETAILS

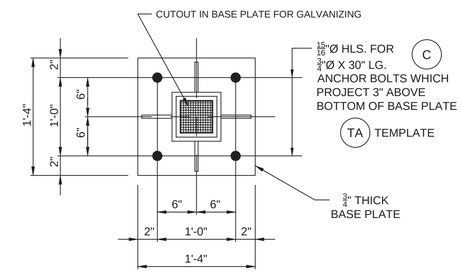

FOUNDATION L1,L2,L3,L4 - DETAILS

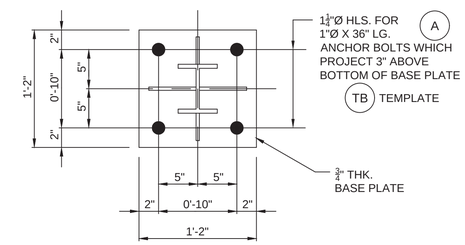

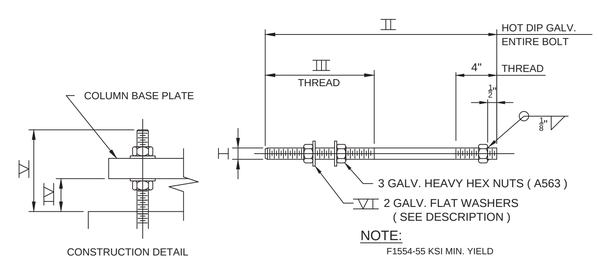

NOTE:
F1554-55 KSI MIN. YIELD

	MARK	I	II	III	IV	V	VI	WASHER DESCRIPTION
C	AB0.75-30	3/4"Ø	2'-6"	6"	2"	5"	F436	1 13/16" O.D. X 3/16" THK. WITH 13/16"Ø HOLE
A	AB1-36	1"Ø	3'-0"	6"	2"	5"	F436	2" O.D. X 3/16" THK. WITH 1 1/16"Ø HOLE

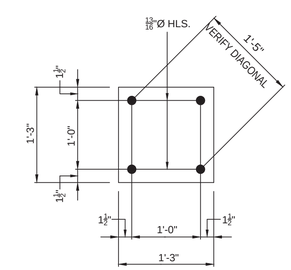

TEMPLATE DETAIL "1TA"
(15" X 3/4" X 1'-3" PLAIN STEEL)
TA

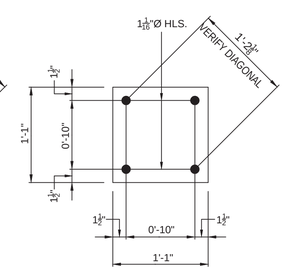

TEMPLATE DETAIL "1TB"
(13" X 3/4" X 1'-1" PLAIN STEEL)
TB

CONTRACTOR IS RESPONSIBLE FOR THE SUPPLY AND INSTALLATION OF ALL MATERIALS SHOWN ON THIS DRAWING

1

S. Jay Waller Digitally signed by S. Jay Waller Date: 2020.10.02 11:33:27 -04'00'

DRAWING IS FOR BIDDING PURPOSES ONLY

NOT BE USED FOR ASSEMBLY OR CONSTRUCTION

ANCHOR BOLT INFORMATION OBTAINED FROM DRAWING E220–18, SH.1, REV. 1 PRODUCED BY:

TATMAN ASSOCIATES, INC.
SOLON, OHIO
PHONE: 800–521–2062

COMMONWEALTH OF PENNSYLVANIA REGISTERED PROFESSIONAL SCOTT J. WALLER ENGINEER No. PE087511

Preston Waller & Associates, Inc.
Process & Engineering Consultants

NO.	DATE	REVISION	BY
1	09–30–20	CHANGE ANCHOR BOLT TEMPLATE DESCRIPTION	SJW
2			
3			
4			
5			
6			
7			
8			
9			

SCALE N.T.S.

DATE	09–17–20
CHECKED BY	SJW
DRAWN BY	SJW

BOROUGH OF CHAMBERSBURG
100 S. SECOND STREET
CHAMBERSBURG, PENNSYLVANIA

COMMERCE SOLAR SUBSTATION
FOR INSTALLATION BID
FOUNDATION ANCHOR BOLT
DETAILS

DRAWING NUMBER
2800–2006ABL

FOUNDATION B1 - HV BREAKER FOUNDATION

PLAN

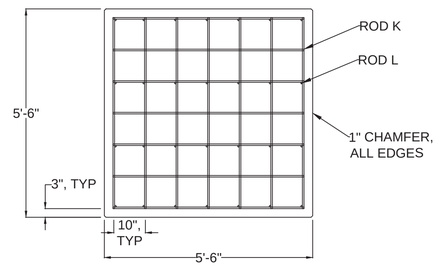

ELEVATION

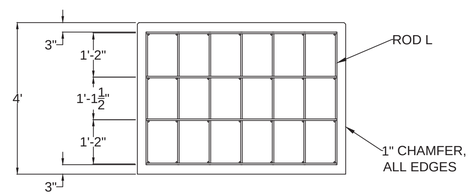

FOUNDATION B2 - LV BREAKER FOUNDATION

PLAN

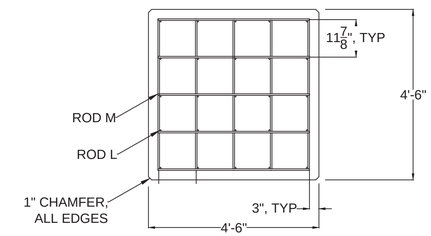

ELEVATION

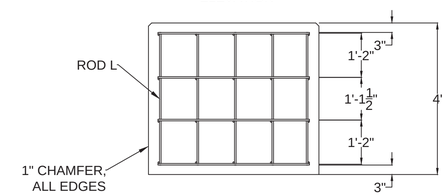

MISC. SUBSTATION FOUNDATIONS

ROD	APPROX. LENGTH		QUANTITY REQUIRED	DESCRIPTION OF MATERIAL	BAR NUMBER	WEIGHT (LBS)
	FEET	INCHES				
K	5	0	56	BILLET STEEL A615–82 GRADE 60 DEFORMED BAR	#4	188
L	3	6	53	BILLET STEEL A615–82 GRADE 60 DEFORMED BAR	#4	125
M	4	0	40	BILLET STEEL A615–82 GRADE 60 DEFORMED BAR	#4	108

S. Jay Waller Digitally signed by S. Jay Waller Date: 2020.10.02 11:33:38 -04'00'

DRAWING IS FOR BIDDING PURPOSES ONLY

NOT BE USED FOR ASSEMBLY OR CONSTRUCTION

COMMONWEALTH OF PENNSYLVANIA REGISTERED PROFESSIONAL SCOTT J. WALLER ENGINEER No. PE087534

Preston Waller & Associates, Inc.
Process & Engineering Consultants

NO.	DATE	REVISION	BY
1			
2			
3			
4			
5			
6			
7			
8			
9			

SCALE 1/2"–1'0"

DATE 07–13–20
CHECKED BY SJW
DRAWN BY PEG

BOROUGH OF CHAMBERSBURG
100 S. SECOND STREET
CHAMBERSBURG, PENNSYLVANIA

COMMERCE SOLAR SUBSTATION
FOR INSTALLATION BID
BREAKER FOUNDATION DETAILS

DRAWING NUMBER
2800–2007BL

CONSTRUCTION DRAWINGS

FOR THE

SITEWORK AT THE COMMERCE STREET ELECTRIC SUBSTATION

LOCATED IN CHAMBERSBURG BOROUGH FRANKLIN COUNTY, PA

PREPARED FOR:
THE BOROUGH OF CHAMBERSBURG
100 SOUTH SECOND STREET
CHAMBERSBURG, PA 17201

PREPARED BY:

DENNIS E. BLACK ENGINEERING, INCORPORATED
ENGINEERING–SURVEYING–PLANNING
2400 PHILADELPHIA AVENUE
CHAMBERSBURG, PA. 17201

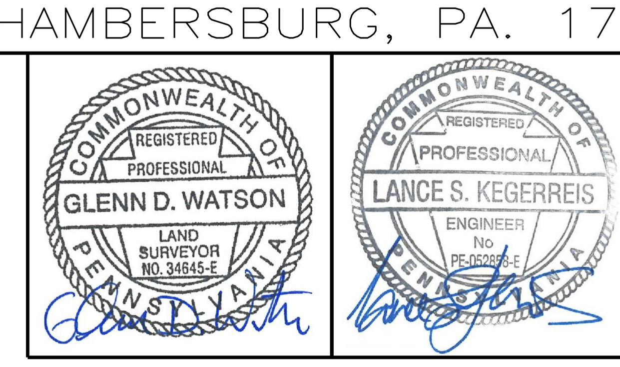

Notes:

1. Project Owner: The Borough of Chambersburg
   100 South Second Street
   Chambersburg, PA 17201

2. The purpose of this plan is to: 1) provide for the grading and excavation work for the sitework portion of the construction work associated with the proposed expansion to the existing municipal–owned electric substation, and 2) assist in defining the scope of work for this project: to install foundations for substation structures and equipment; to install conduits, ductbanks, and raceways; to install substation ground grid; to backfill and grade the substation site; to assemble and install tubular structures and structural elements; to assemble and install substation LV structure and structural elements; to install substation fence; to stabilize and apply permanent seeding and erosion control blankets on the small area of the cut–slope on the north side of the substation site; and leave the existing Compost Filter Socks and the Rock Construction Entrance in place for the future substation construction work to be performed under another contract.

3. The property shown on this plan is comprised of all of Franklin County Tax Parcel 05–1C00.–001B–000000, being the lands conveyed by a deed dated August 19, 1996 from Nahama Limited (a Bahama's Corporation) to The Mayor and Town Council of the Borough of Chambersburg and recorded in Franklin County Deed Book 1310 at Page 507, being Lot 1 on a plan of a Subdivision of Land prepared by Thomas Michael Englerth Surveying for Nahama Limited dated July 25, 1996 and recorded in Plat Book 288–G at Page 112.

4. All easements, right–of–ways, restrictions and/or covenants of record are intended to be shown on this plan however, Dennis E. Black Engineering, Inc. does not certify to the completeness and legitimacy of land title issues.

5. No portion of this property lies within the Special Flood Hazard Boundary shown on the Flood Insurance Rate Map published by the U.S Department of Homeland Security and the Federal Emergency Management Agency (Community Map Number 42055C0283E).

6. The underground position of the utilities and drainage structures shown on this survey are approximate and are based on the surface location of the appurtenances (i.e.: inlets, hydrants, valves, manholes, etc.), construction plans, and as–built record drawings.

7. The bearings and coordinates shown on this plan are referenced to the Pennsylvania State Plane Coordinate System (South Zone) of the 2011 Adjustment of the North American Datum of 1983 [NAD83(NA2011)–PAS]. The topography is referenced to the North American Vertical Datum of 1988 (NAVD88). All linear dimension units are in U.S. Survey Feet. The perimeter boundary description and topography shown hereon was obtained from a field survey performed by Dennis E. Black Engineering, Inc. in April of 2020.

8. Any damage to adjoining public roads, utilities, etc. during construction shall be repaired in kind by the contractor.

9. The contractor or persons performing any excavation shall verify depth and location of all existing utility lines prior to any excavation.

10. The contractor shall take all necessary precautions to protect the existing utilities and to maintain uninterrupted service. Any damage incurred due to the contractor's operation shall be repaired immediately at the contractor's expense. The contractor shall exercise caution in areas where low hanging wires exist. The contractor shall protect utilities and storm water conveyance and management systems during construction by insuring proper cover, increasing cover, or constructing roadway and parking fill and base courses before loading the site with heavy vehicles.

11. The contractor shall not place any of the proposed facilities shown on this plan within a minimum isolation distance of 1'–0" in relation to any utility facilities. The contractor shall not place any of the proposed facilities shown on this plan within a minimum isolation distance of 2'–0" in relation to utility poles.

12. The contractor shall notify the following utilities or agencies at least five (5) days before starting the work shown on these drawings:

Pennsylvania One Call System	(800) 242–1776
Borough of Chambersburg Electric Department	(717) 251–2426
Borough of Chambersburg Land Use & Community Development	(717) 251–2436
Borough of Chambersburg Stormwater Department	(717) 251–2434
Borough of Chambersburg Water & Sewer Department	(717) 251–2405
Franklin County Conservation District	(717) 264–5499
Dennis E. Black Engineering, Inc.	(717) 263–8794

13. The contractor shall notify the 24/7 Electrical System Operator (717–261–3250) upon arrival at the beginning of each day. The Borough of Chambersburg will maintain a fenced secure area around the work site and the contractor will be provided a "Buddy–Lock System" for access to the work site. The contractor shall notify the 24/7 Electrical System Operator at the end of each day when leaving the site and confirm that the site is locked and secure.

14. Before construction commences, the contractor shall verify the existing site conditions and notify the engineer of any discrepancies between the plans and the existing field conditions. The contractor shall perform his own field inspection and surveys (if necessary) to determine the limit of earthwork needed to complete this project.

15. In the event of a discrepancy between scaled and figured dimensions, the figured dimensions shall govern.

16. The contractor shall be responsible for the implementation of the Erosion and Sedimentation Control Plans. The erosion and sedimentation control measures shall be installed by the contractor per the Erosion and Sedimentation Control Plans, Details and Specifications. The total disturbed area amounts to 0.30 acres. All sub–contractors shall follow the Erosion and Sedimentation Control Plans.

17. Backfill and grading of the substation site shall be as shown on the substation plans prepared by others and contained within the geotechnical report.

18. The entire area included within the proposed limits of cut and fill shall be stripped of all root material, trash and other organic and otherwise objectionable, non–complying and unsuitable soils and materials.

19. The Chambersburg, PA Quadrangle of the National Wetland Inventory Maps does not indicate the presence of jurisdictional wetland habitats within the project site. No field investigation has been performed to identify any wetland habitats.

20. Borough of Chambersburg employees shall have access to any and all drainage easements and/or drainage facilities and shall have the right at their discretion to maintain or repair the facilities as necessary to restore them to the design conditions. Any maintenance or repairs made to privately–owned drainage facilities will be at the facility owner's expense.

21. The Contractor shall notify the Borough of Chambersburg not fewer than 7 days prior to the construction of any site improvements including SWM BMPs. Contact Mr. Andrew Stottlemyer, Storm Sewer Manger at (717) 251–2434. Email: astottlemyer@chambersburgpa.gov

22. On–site water, electric, and restroom facilities will be available to the contractor for use on this project.

23. The use of explosives is not permitted on this project without written permission from the Borough of Chambersburg.

UPI: 05–1C00.–001B–000000

LEGEND

PROPERTY LINE	SANITARY SEWER MANHOLE
ADJOINING PROPERTY LINE	SANITARY SEWER CLEANOUT (C/O)
EASEMENT LINE	WATER VALVE (WV)
CENTERLINE	WATER METER (WM)
FLOODPLAIN BOUNDARY	WATER CURB STOP (CS)
ZONING BOUNDARY	FIRE HYDRANT
FENCE LINE	GAS VALVE (GV)
GUIDE RAIL	ELECTRIC MANHOLE
STREAM EDGE	TELEPHONE MANHOLE
EX. OVERHEAD UTILITY LINE (ETC)	EXISTING LIGHT POLE
EX. UNDERGROUND UTILITY LINE (ETC) — E=ELECTRIC T=TELEPHONE C=CABLE TV	PROPOSED LIGHT POLE
PROP. UNDERGROUND ELECTRIC (E)	EXISTING UTILITY POLE
PROP. UNDERGROUND TELEPHONE (T)	UTILITY POLE AND GUY WIRE
PROP. UNDERGROUND CABLE TV (C)	DECIDUOUS TREE
EXISTING SEWER LINE (Ex.8"SS)	EVERGREEN TREE
PROPOSED SEWER LINE (6"SS)	STORM SEWER INLET
EXISTING WATER LINE (Ex.12"W)	YARD INLET
PROPOSED WATER LINE (6"W)	STORM SEWER MANHOLE
EXISTING GAS LINE (Ex.2"Gas)	PARKING METER (PM)
PROPOSED GAS LINE (¾"Gas)	SIGN
EXISTING STORM SEWER	BOLLARD
PROPOSED STORM SEWER	FLAGPOLE
EXISTING CONTOUR LINE (664)	
PROPOSED CONTOUR LINE (664)	
EXISTING SPOT ELEVATION (*Slanted Text*) × *668.35*	
PROPOSED SPOT ELEVATION (Vertical Text) × 668.35	
DETECTABLE WARNING SURFACE	
ADA ACCESSIBLE PARKING	ELEV: BENCHMARK
EXISTING BUILDING	PROPOSED GRAVEL AREA
PROPOSED CONCRETE	

PENNSYLVANIA ONE CALL SYSTEM, INC.
1–800–242–1776

PENNSYLVANIA LAW REQUIRES NOT LESS THAN THREE NOR MORE THAN TEN WORKING DAYS NOTICE BEFORE EXCAVATION

UTILITY LOCATIONS SHOWN HEREON ARE APPROXIMATE.

REFER TO PENNSYLVANIA ONE CALL SYSTEM, INC. DESIGN NOTIFICATION SERIAL #20201052124 NOTIFIED 4/24/2020

PENNSYLVANIA ONE CALL SYSTEM, INC. 1–800–242–1776 STOP–CALL BEFORE YOU DIG!

PA Act 287 of 1974 as amended by Act 50 of 2017 73 P.S. §176 et. seq. Utility Listing:

COMPANY: GUILFORD WATER AUTHORITY
ADDRESS: 115 SPRING VALLEY RD
CHAMBERSBURG, PA. 17202
CONTACT: JEN COOLEY
EMAIL: jcooley@guilfordtwp.us

COMPANY: WEST PENN POWER
ADDRESS: 800 CABIN HILL DR
ROOM B100N
GREENSBURG, PA. 15601
CONTACT: ROBERT PAINTER
EMAIL: rpainte@firstenergycorp.com

COMPANY: CHAMBERSBURG BOROUGH
ADDRESS: 100 S 2ND ST
PO BOX 1009
CHAMBERSBURG, PA. 17201
CONTACT: KENNETH WEAVER
EMAIL: kweaver@chambersburgpa.gov

COMPANY: BERKS WESTERN TELECOM INC
ADDRESS: 723 BROWNSVILLE RD
SINKING SPRING, PA. 19608
CONTACT: DEANA REEDY
EMAIL: deana@bwtcomm.com

Vicinity Map
Scale: 1"= 1000'

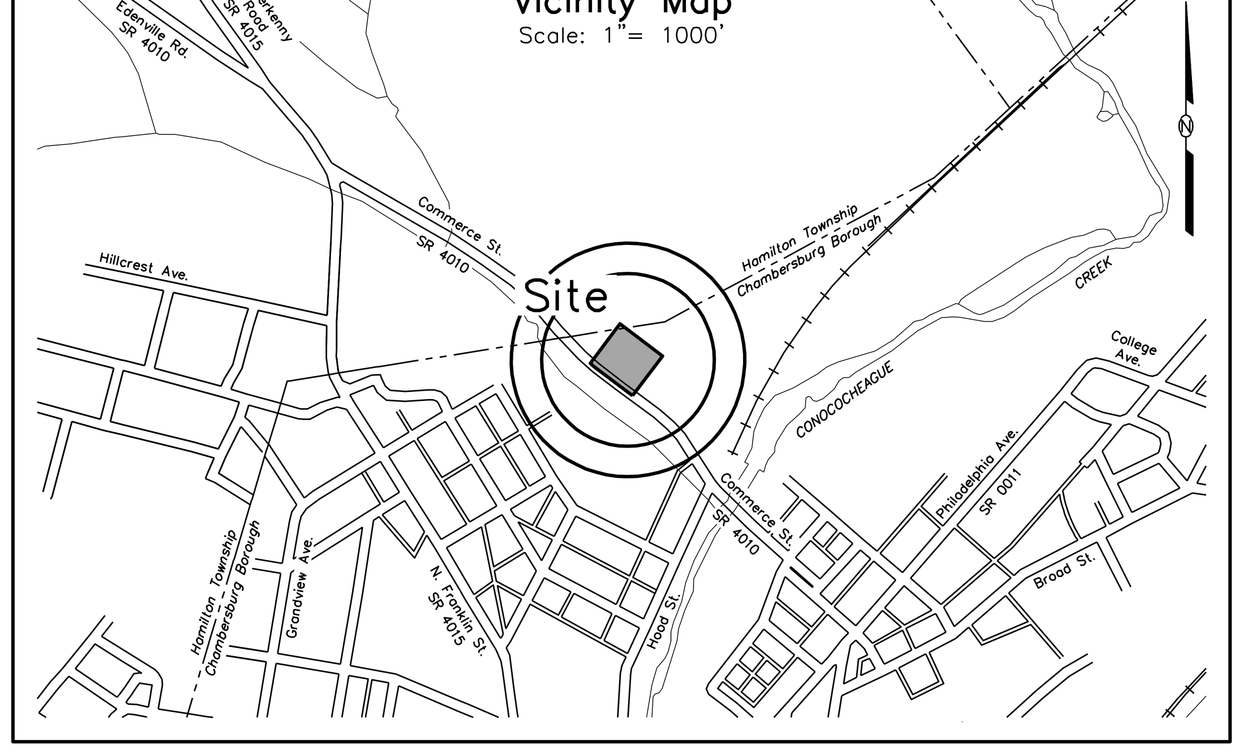

Borough of Chambersburg – Sitework at the Commerce Street Electric SubStation

Construction Drawings Sheet Index

1 Project Cover Sheet
2 Topographic and Existing Conditions Survey
3 Site Layout and Grading Plan
4 Erosion and Sediment Control Plan
5 Erosion and Sediment Control Plan Notes and Details

REVISIONS

NO.	DATE	DESCRIPTION	BY
1	10/01/2020	Addition of Design Details	GDW

DENNIS E. BLACK ENGINEERING, INCORPORATED
ENGINEERING–SURVEYING–PLANNING
2400 PHILADELPHIA AVENUE
CHAMBERSBURG, PA 17201
(717)263–8794 (888)238–0661

DWN. GDW	CLIENT No. 1075	ORDER No. 190096.00	SHEET 1 OF 5
CHK. GDW	DATE 9/16/2020	AutoCAD DRAWING REF. NUMBER AUTOCAD#	DRAWING No. 20–51
APP. GDW	SCALE As Shown		

THE ORIGINAL DRAWING AND THE INFORMATION SHOWN THEREON ARE THE PROPERTY OF *D. E. BLACK ENG., INC.* AND SHALL NOT BE DUPLICATED WITHOUT WRITTEN PERMISSION

FILE:N:\Land Projects 2019\190096.00\dwg\Sheet Files\190096.00-BoroughSubstation-SubstationContract.dwg LAYOUT:Sh1-Cover BY: Glen Watson ON:9/30/2020 4:24 PM

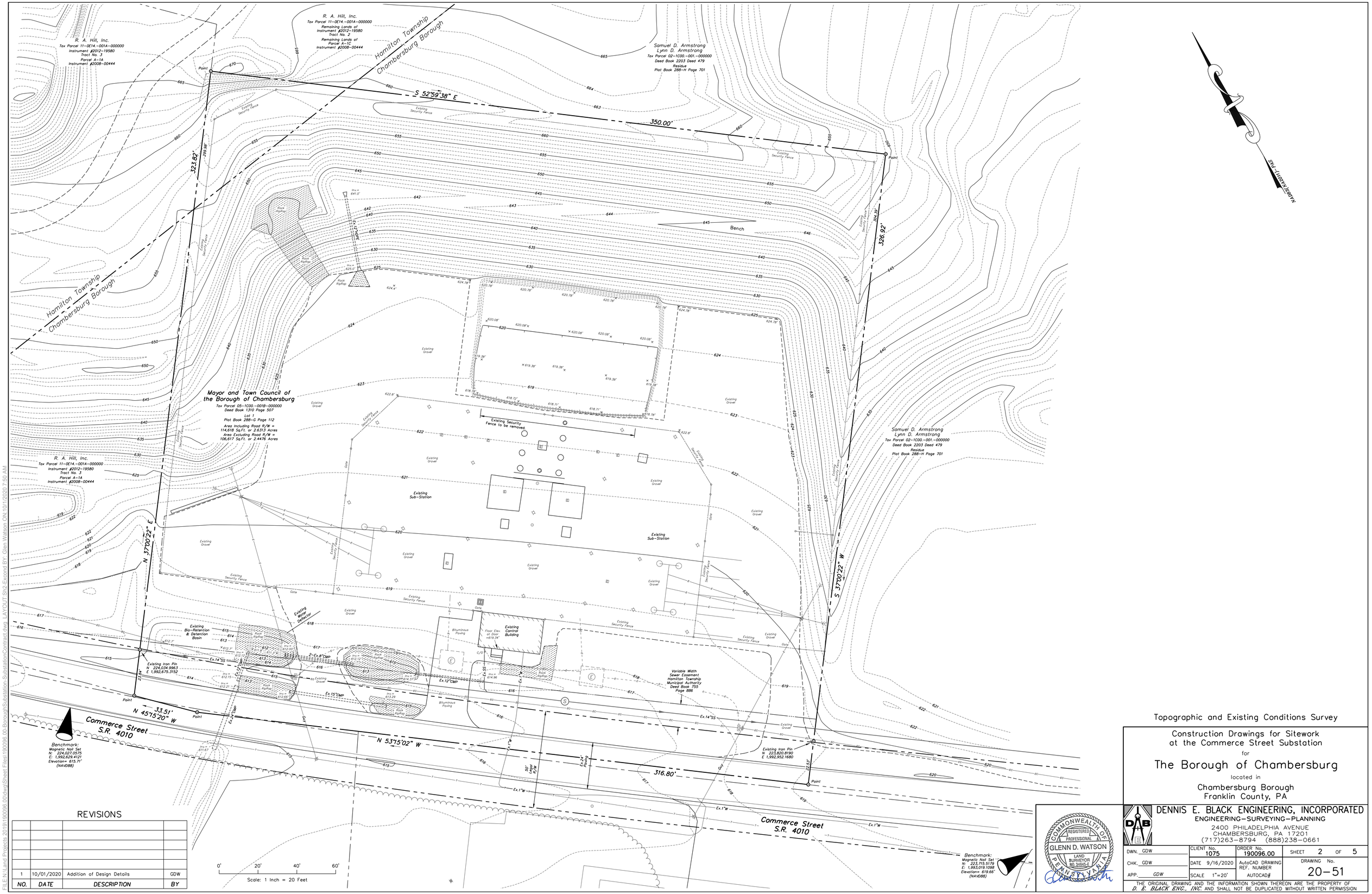

REVISIONS

NO.	DATE	DESCRIPTION	BY
1	10/01/2020	Addition of Design Details	GDW

Topographic and Existing Conditions Survey

Construction Drawings for Sitework
at the Commerce Street Substation
for

The Borough of Chambersburg

located in

Chambersburg Borough
Franklin County, PA

COMMONWEALTH OF PENNSYLVANIA
REGISTERED PROFESSIONAL
GLENN D. WATSON
LAND SURVEYOR
NO. SM46-E

DENNIS E. BLACK ENGINEERING, INCORPORATED
ENGINEERING–SURVEYING–PLANNING
2400 PHILADELPHIA AVENUE
CHAMBERSBURG, PA 17201
(717)263–8794 (888)238–0661

DWN. GDW	CLIENT No. 1075	ORDER No. 190096.00	SHEET 2 OF 5
CHK. GDW	DATE 9/16/2020	AutoCAD DRAWING REF. NUMBER	DRAWING No. 20–51
APP. GDW	SCALE 1"=20'	AUTOCAD#	

THE ORIGINAL DRAWING AND THE INFORMATION SHOWN THEREON ARE THE PROPERTY OF D. E. BLACK ENG., INC. AND SHALL NOT BE DUPLICATED WITHOUT WRITTEN PERMISSION

FILE:N:\Land Projects 2019\190096.00\dwg\Sheet Files\190096.00 BoroughSubstationSubstationContract.dwg LAYOUT:Sht2-Econd BY: Glen Watson ON:10/1/2020 7:50 AM

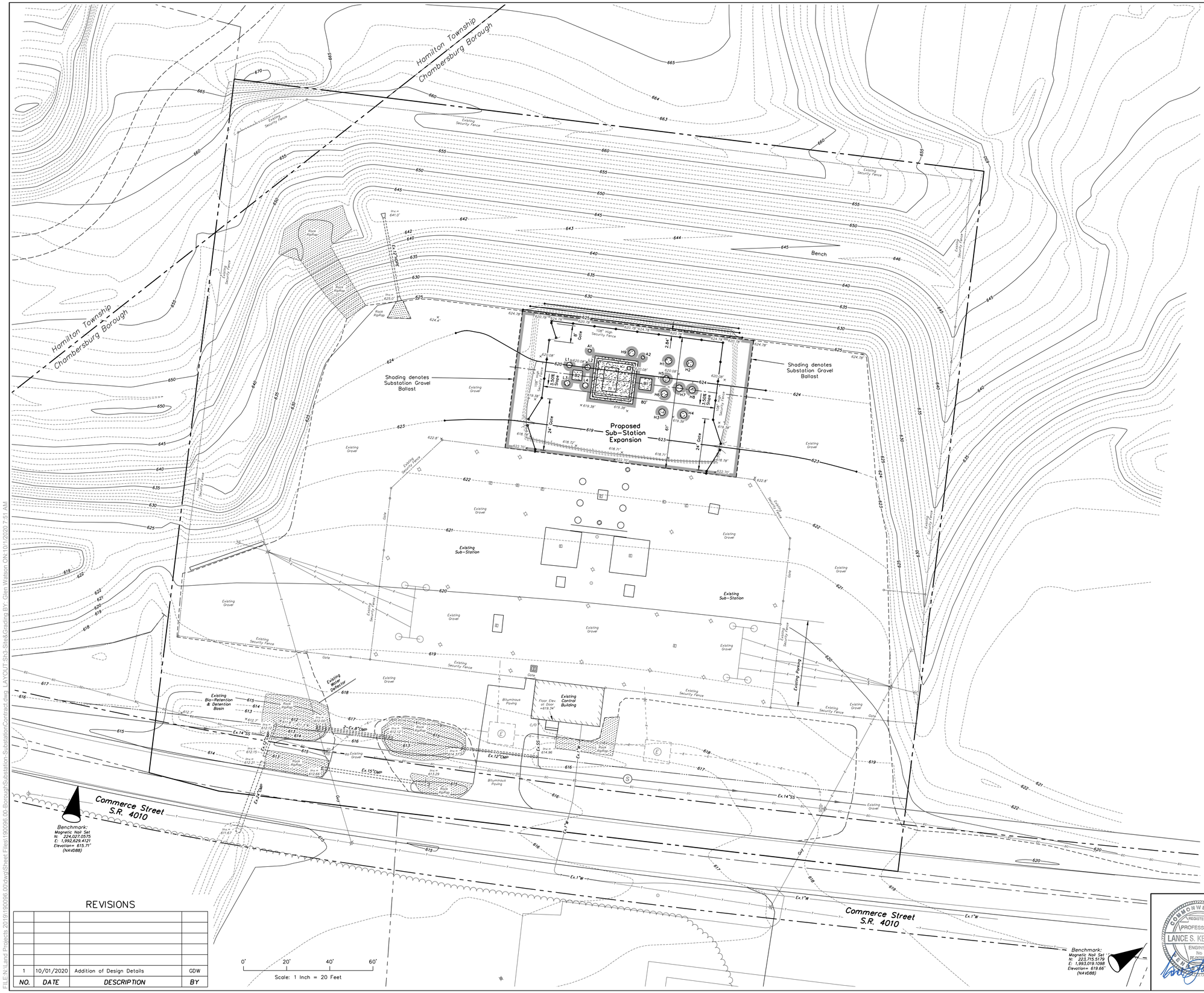

NJ83-F(2001)-FAS

Site Layout and Grading Plan

Construction Drawings for Sitework
at the Commerce Street Substation
for
The Borough of Chambersburg
located in
Chambersburg Borough
Franklin County, PA

REVISIONS

NO.	DATE	DESCRIPTION	BY
1	10/01/2020	Addition of Design Details	GDW

DENNIS E. BLACK ENGINEERING, INCORPORATED
ENGINEERING–SURVEYING–PLANNING
2400 PHILADELPHIA AVENUE
CHAMBERSBURG, PA 17201
(717)263–8794 (888)238–0661

COMMONWEALTH OF PENNSYLVANIA REGISTERED PROFESSIONAL LANCE S. KEGERREIS ENGINEER No. PE-059824-E

DWN. GDW	CLIENT No. 1075	ORDER No. 190096.00	SHEET 3 OF 5
CHK. GDW	DATE 9/16/2020	AutoCAD DRAWING REF. NUMBER	DRAWING No. 20–51
APP. GDW	SCALE 1"=20'	AUTOCAD#	

THE ORIGINAL DRAWING AND THE INFORMATION SHOWN THEREON ARE THE PROPERTY OF D. E. BLACK ENG., INC. AND SHALL NOT BE DUPLICATED WITHOUT WRITTEN PERMISSION

FILE:N:\Land Projects 2019\190096.00\dwg\Sheet Files\190096.00-Borough\Substation-Substation\Contract.dwg, LAYOUT:SH3-Site&Grading BY: Glen Watson ON 10/1/2020 7:51 AM

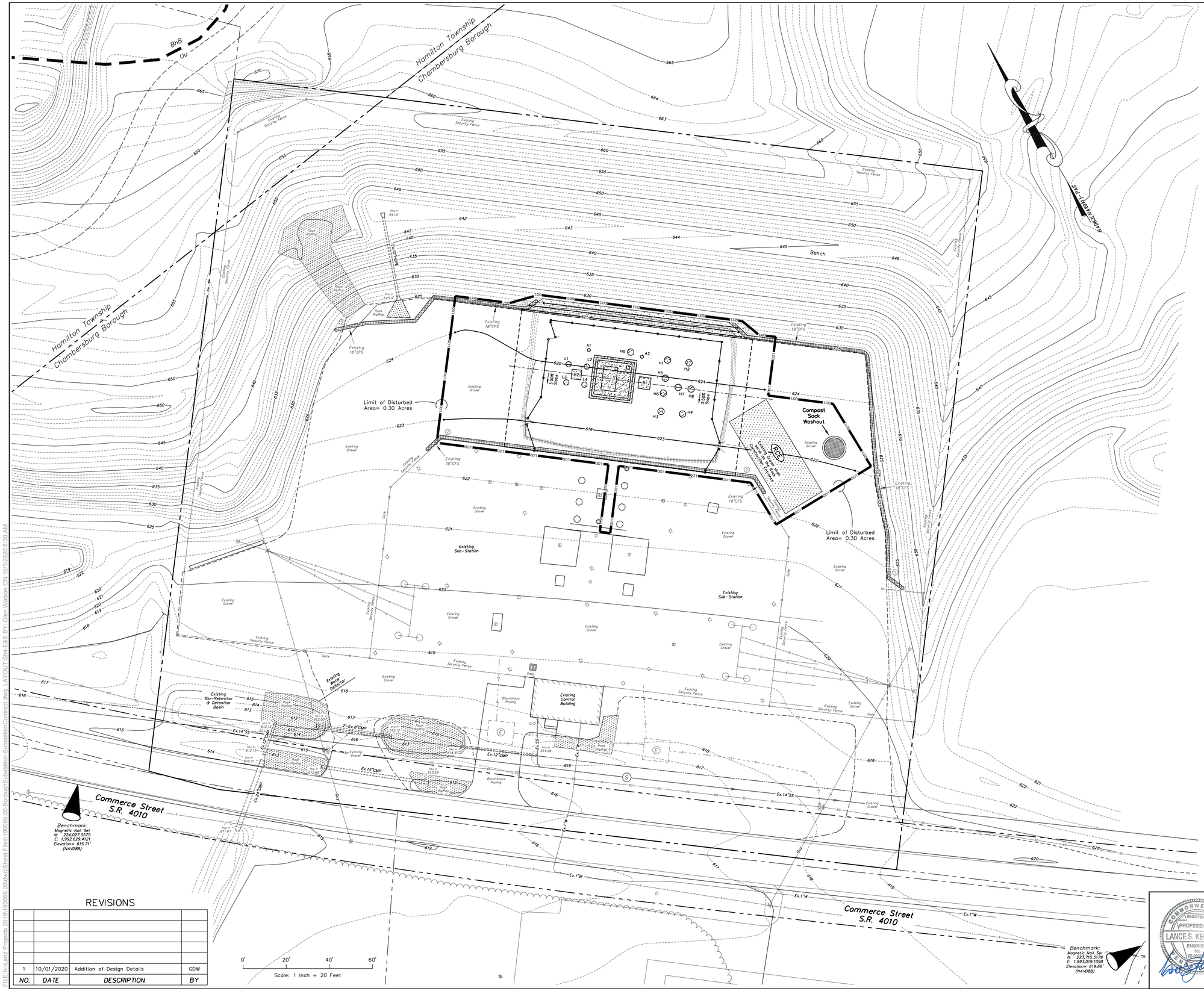

Limit of Disturbed Area = 0.30 Acres

SEDIMENT & EROSION CONTROL LEGEND

- LIMIT OF DISTURBED AREA — LOD
- ROCK CONSTRUCTION ENTRANCE — RCE
- COMPOST FILTER SOCK — nn"CFS
- TOPSOIL STOCKPILE
- EROSION CONTROL BLANKET

SOIL TYPES

BhB – BEDINGTON CHANNERY SILT LOAM, 3 TO 8% SLOPES
Uu – URBAN LAND – UDORTHENTS COMPLEX, 0 TO 25% SLOPES

NOTE: A BhB LINE DENOTES THE APPROXIMATE AERIAL EXTENT OF SOIL TYPES AS MAPPED AND DEFINED IN WEB SOIL SURVEY 3.3.2 (U.S.D.A. – NATURAL RESOURCES CONSERVATION SERVICE, MAY 2020).

REVISIONS

NO.	DATE	DESCRIPTION	BY
1	10/01/2020	Addition of Design Details	GDW

Erosion and Sediment Control Plan

Construction Drawings for Sitework at the Commerce Street Substation

for

The Borough of Chambersburg

located in

Chambersburg Borough
Franklin County, PA

COMMONWEALTH OF PENNSYLVANIA
REGISTERED PROFESSIONAL
LANCE S. KEGERREIS
ENGINEER
No. PE-059814-E

DENNIS E. BLACK ENGINEERING, INCORPORATED
ENGINEERING–SURVEYING–PLANNING
2400 PHILADELPHIA AVENUE
CHAMBERSBURG, PA 17201
(717)263–8794 (888)238–0661

DWN. GDW	CLIENT No. 1075	ORDER No. 190096.00	SHEET 4 OF 5
CHK. GDW	DATE 9/16/2020	AutoCAD DRAWING REF. NUMBER	DRAWING No. 20–51
APP. GDW	SCALE 1"=20'	AUTOCAD#	

THE ORIGINAL DRAWING AND THE INFORMATION SHOWN THEREON ARE THE PROPERTY OF D. E. BLACK ENG., INC. AND SHALL NOT BE DUPLICATED WITHOUT WRITTEN PERMISSION

FILE:N:\Land Projects 2019\190096.00\dwg\Sheet Files\190096.00-Borough\Substation-Substation\Contract.dwg, LAYOUT:SH4-E&S BY: Glen Watson ON: 10/1/2020 8:00 AM

Sequence Of Construction

General Notes:

- The construction of the substation shall be done in accordance with the specifications and guidelines noted on the plans, and performed in a sequence and manner that will limit the amount of exposed soil area, control runoff concentrations and velocities, stabilize disturbed areas within a reasonable time period, and control sedimentation to within the project area. During construction, the contractor shall supplement the facilities shown on this plan with additional BMP's as necessary to minimize sedimentation pollution.
- At least 7 days prior to starting any earth disturbance activities (including clearing and grubbing), the owner and/or operator shall invite all contractors, the landowner, and the E&S plan preparer to an on-site pre-construction meeting.
- At least 3 days prior to starting any earth disturbance activities, or expanding into an area previously unmarked, the Pennsylvania One Call System Inc. shall be notified at 1-800-242-1776 for the location of existing underground utilities.
- All earth disturbance activities shall proceed in accordance with the sequence. Each stage shall be completed and immediately stabilized before any following stage is initiated. Clearing, grubbing, and topsoil stripping shall be limited only to those areas described in each stage. Any deviation from the following sequence must be approved in writing from Dennis E. Black Engineering, Inc.

Construction Sequence:

1. Field-mark the limits of disturbance of the site.
2. Maintain the existing Compost Filter Socks #1, #2, and #3. Maintain the existing gravel as the Rock Construction Entrance. Maintain perimeter controls including the temporary Compost Filter Socks where indicated on the plan. All roadways and parking lots shall be kept free of sediment and debris.
3. Complete any necessary demolition work.
4. Perform the substation excavation, construction, backfilling, and placement of gravel substation surface and fencing. Perform final grading to the elevations shown on the plans and ensure proper compaction.
5. As the grading of the cut slope is finalized, and if it is at a time favorable for permanent seeding (March 1 to June 1 or August 1 to October 1), vegetative cover may be disturbed as necessary to complete final grading.
6. Excavate, and with topsoil, shape the final surface of the cut slope. Soil supplements shall be added to the topsoil and the topsoil shall be well worked and smoothed. Permanent vegetated swale seeding mix shall be immediately applied to the cut slope and the erosion control blankets shall be installed on the cut slope.
7. The rock construction entrance and existing Compost Filter Socks #1, #2, and #3 shall be left in place for additional substation construction work scheduled under another contract.
8. A minimum depth of six inches of topsoil shall be replaced on any remaining disturbed areas. Till the soil to a depth of 12 inches from final grade and then install/apply topsoil to a depth of 6 inches from final grade. Apply permanent seeding to the disturbed areas. All remaining disturbed areas shall be stabilized as soon as possible with permanent seeding and the required minimum depth of six inched (6") of topsoil.
9. Until final permanent site stabilization of the cut slope has been achieved, Compost Filter Socks #1, #2, and #3 shall be left in place for additional substation construction work scheduled under another contract. Permanent stabilization should be defined as "A minimum uniform 70% perennial vegetative cover or other permanent non-vegetative cover with a density sufficient to resist accelerated surface erosion and subsurface characteristics sufficient to resist sliding and other movements." All parking lots and drive aisles must be paved or have a compacted stone base in place before removal of BMPs.

COMPOST FILTER SOCK CONCRETE WASHOUT INSTALLATION DETAIL

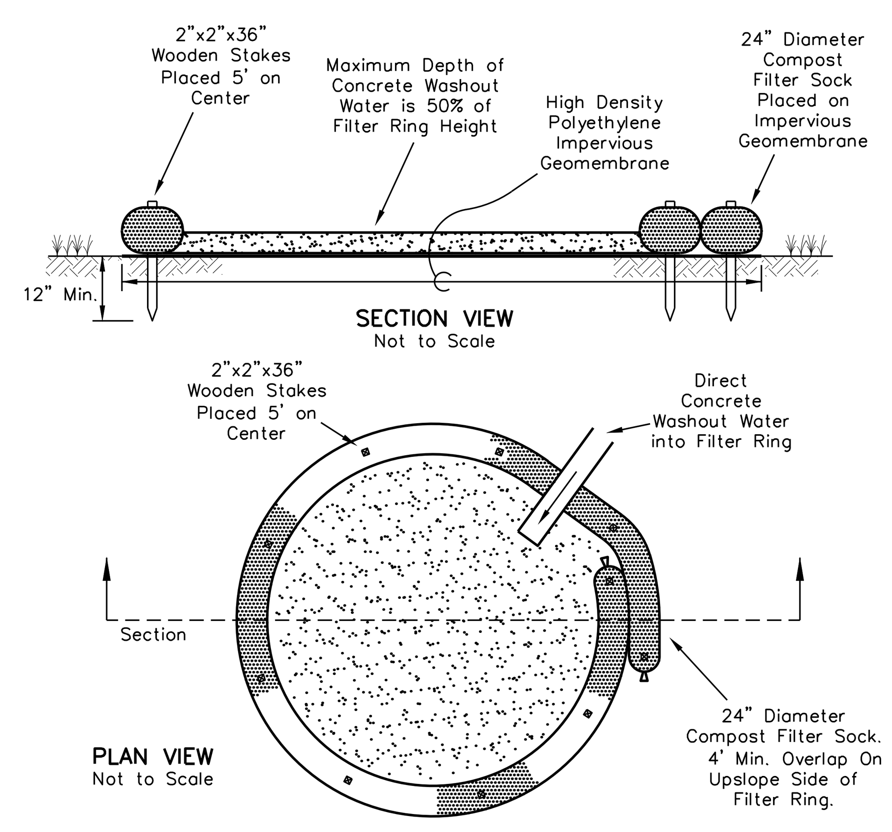

INSTALLATION SPECIFICATIONS:

1. INSTALL ON FLAT GRADE FOR OPTIMUM PERFORMANCE.
2. 18" DIAMETER COMPOST FILTER SOCK MAY BE STACKED ONTO DOUBLE 24" DIAMETER SOCKS IN PYRAMIDAL CONFIGURATION FOR ADDED HEIGHT.
3. PROPER SIGNAGE SHALL BE PROVIDED INFORMING CONCRETE TRUCK DRIVERS TO THE PRESENCE AND LOCATION OF WASHOUT FACILITIES.
4. WASHOUT FACILITIES SHALL NOT BE PLACED WITHIN 50 FEET OF STORM DRAINS, OPEN DITCHES, OR SURFACE WATERS. THE FACILITIES SHALL BE LOCATED AT A CONVENIENT LOCATION FOR TRUCKS, PREFERABLY NEAR WHERE THE CONCRETE IS BEING POURED, BUT FAR ENOUGH FROM OTHER VEHICULAR TRAFFIC TO MINIMIZE THE POTENTIAL FOR ACCIDENTAL DAMAGE OR SPILLS.
5. WHEREVER POSSIBLE, WASHOUT FACILITIES SHOULD BE LOCATED ON SLOPES NOT EXCEEDING A 2% GRADE.
6. A HIGH DENSITY POLYETHYLENE IMPERVIOUS GEOMEMBRANE SHALL BE PLACED ON THE GROUND SURFACE AT THE LOCATION OF THE WASHOUT.
7. COMPOST SOCKS SHALL BE STAKED IN THE MANNER RECOMMENDED BY THE MANUFACTURER AROUND THE PERIMETER OF THE GEOMEMBRANE SO AS TO FORM A RING WITH THE ENDS OF THE SOCK LOCATED AT THE UPSLOPE SIDE.
8. THE SOCK SHALL BE IN CONTINUOUS CONTACT WITH THE GEOMEMBRANE AT ALL LOCATIONS.
9. WHERE DESIRED, SOCKS MAY BE STACKED AND STAKED SO AS TO FORM A TRIANGULAR CROSS-SECTION.

MAINTENANCE PROGRAM:

1. THE CONCRETE WASHOUT FACILITY SHALL BE INSPECTED DAILY. DAMAGED OR LEAKING WASHOUTS SHOULD BE DEACTIVATED AND REPAIRED OR REPLACED IMMEDIATELY.
2. ACCUMULATED MATERIALS SHALL BE REMOVED WHEN THEY REACH 50% CAPACITY.
3. THE IMPERVIOUS GEOMEMBRANE SHALL BE REPLACED WITH EACH CLEANING OF THE WASHOUT FACILITY.

Standard Erosion and Sedimentation Control Plan Notes

General E&S Notes:

1. A copy of the approved erosion and sediment control plan must be available at the project site at all times. Dennis E. Black Engineering, Inc. shall be notified of any changes to the approved plan prior to implementation of those changes.
2. Immediately upon discovering unforeseen circumstances posing the potential for accelerated erosion and/or sediment pollution, the operator shall implement appropriate best management practices to minimize the potential for accelerated erosion and/or sediment pollution and notify the Dennis E. Black Engineering, Inc.
3. All pumping of sediment laden water shall be through a sediment control BMP, such as a pumped water filter bag or equivalent sediment removal facility, over undisturbed vegetated areas.
4. Failure to correctly install E&S BMPs, failure to prevent sediment-laden runoff from leaving the earth disturbance activity, or failure to take immediate corrective action to resolve failure of E&S BMPs may result in administrative, civil, and/or criminal penalties being instituted by the Department as defined in Section 602 of the Pennsylvania Clean Streams Law. The Clean Streams Law provides for up to $10,000 per day in civil penalties, up to $10,000 in summary criminal penalties, and up to $25,000 in misdemeanor criminal penalties for each violation.
5. All building materials and wastes shall be removed from the site and recycled or disposed of in accordance with the Department's Solid Waste Management Regulations at 25 Pa. Code 260.1 et seq., 271.1., and 287.1 et seq. No building materials or wastes or unused building materials shall be burned, buried, dumped, or discharged at the site.
6. The contractor will be responsible for the removal of any excess material and make sure the site(s) receiving the excess has an approved and fully implemented erosion and sediment control plan that meets the conditions of Chapter 102 and/or other State or Federal regulations.
7. Clean Fill is defined as: Uncontaminated, non-water soluble, non-decomposable, inert, solid material. The term includes soil, rock, stone, dredged material, used asphalt, and brick, block or concrete from construction and demolition activities that is separate from other waste and is recognizable as such. The term does not include materials placed in or on the waters of the Commonwealth unless otherwise authorized. (The term "used asphalt" does not include milled asphalt or asphalt that has been processed for re-use.).
8. Any placement of clean fill that has been affected by a spill or release of a regulated substance must use form FP-001 to certify the origin of the fill material and the results of the analytical testing to qualify the material as clean fill. Form FP-001 must be retained by the owner of the property receiving the fill.
9. Environmental due diligence must be performed to determine if the fill materials associated with the project qualify as clean fill. Environmental due diligence is defined as: Investigative techniques, including, but not limited to, visual property inspections, electronic data base searches, review of property ownership, review of property use history, Sanborn maps, environmental questionnaires, transaction screens, analytical testing, environmental assessments or audits. Analytical testing is not a required part of due diligence unless visual inspection and/or review of the past land use of the property indicates that the fill may have been subjected to a spill or release of a regulated substance. If the fill may have been affected by a spill or release of a regulated substance, it must be tested to determine if it qualifies as clean fill. Testing should be performed in accordance with Appendix A of the Department's policy "Management of Clean Fill."
10. Concrete wash water shall be handled in the manner described on the plan drawings. In no case shall it be allowed to enter any surface waters or groundwater systems.
11. Underground utilities cutting through any active channel shall be immediately backfilled and the channel restored to its original cross-section and protective lining. Any base flow within the channel shall be conveyed past the work area in the manner described in this plan until such restoration is complete.

General Channel Specifications:

12. All channels must be kept free of obstructions such as fill ground, fallen leaves & woody debris, accumulated sediment, and construction materials/wastes. Channels should be kept mowed and/or free of all weedy, brushy or woody growth. Any underground utilities running across/ through the channel(s) shall be immediately backfilled and the channel(s) repaired and stabilized per the channel cross-section detail.
13. Vegetated channels shall be constructed free of rocks, tree roots, stumps or other projections that will impede normal channel flow and/or prevent good lining to soil contact. The channel shall be initially over-excavated to allow for the placement of topsoil.
14. Channels having Riprap, Reno Mattress, or Gabion linings must be sufficiently over-excavated so that the design dimensions will be provided after placement of the protective lining.

General Stabilization Specifications:

15. Upon temporary cessation of an earth disturbance activity or any stage or phase of an activity where a cessation of earth disturbance activities will exceed 4 days, the site shall be immediately seeded, mulched, or otherwise protected from accelerated erosion and sedimentation pending future earth disturbance activities.
16. Permanent stabilization is defined as a minimum uniform 70% perennial vegetative cover or other permanent non-vegetative cover with a density sufficient to resist accelerated surface erosion and subsurface characteristics sufficient to resist sliding and other movements.
17. Topsoil required for the establishment of vegetation shall be stockpiled at the an off-site location by the contractor.
18. Areas which are to be topsoiled shall be scarified to a minimum depth of 3 to 5 inches - 6 to 12 inches on compacted soils - prior to placement of topsoil. Areas to be vegetated shall have a minimum 6 inches of topsoil in place prior to seeding and mulching. Fill outslopes shall have a minimum of 2 inches of topsoil.
19. Topsoil should not be placed while the topsoil or subsoil is in a frozen or muddy condition, when the subsoil is excessively wet, or in a condition that may otherwise be detrimental to proper grading and seedbed preparation. Compacted soils should be scarified 6 to 12 inches along contour whenever possible prior to seeding.
20. Immediately after earth disturbance activities cease, the operator shall stabilize the disturbed areas. During non-germinating periods, mulch must be applied at the specified rates. Disturbed areas which are not at finished grade and which will be re-disturbed within 1 year must be stabilized in accordance with the temporary vegetative stabilization specifications. Disturbed areas which are at final grade or which will not be re-disturbed within 1 year must be stabilized in accordance with the permanent vegetative stabilization specifications.
21. An erosion control blanket will be installed on all disturbed slopes 3:1 or steeper, all areas of concentrated flows, and disturbed areas within 50' of a surface water.

General Maintenance Program Notes:

22. Until the site is stabilized, all erosion and sediment control BMPs must be maintained properly. Maintenance must include inspections of all erosion and sediment control BMPs after each runoff event and on a weekly basis. All preventative and remedial maintenance work, including cleanout, repair, replacement, re-grading, reseeding, re-mulching and re-netting must be performed immediately. If erosion and sediment control BMPs fail to perform as expected, replacement BMPs or modifications of those installed will be required.
23. Any sediment removed from BMPs during construction will be returned to upland areas on site and incorporated into the site grading.
24. A log showing the dates that E&S BMPs were inspected as well as any deficiencies found and the date that they were corrected shall be maintained on the site and be made available to the Franklin County Conservation District or other regulatory agency officials at the time of inspection.

Operation and Maintenance of Best Management Practices (BMPs):

Permanent Vegetative Stabilization:

Care must be taken to protect the downstream BMPs from excessive sediments from the watershed. Whenever land disturbing activities take place within a contributing watershed to any BMP, effective erosion and sedimentation control measures must first be in place to exclude sediments from reaching that BMP. Regular inspections are required during the first few years to ensure that vegetation becomes adequately established. Until the vegetation becomes dense and self-sustaining, regular maintenance should include watering, fertilizing, planting or re-seeding as required. Mowing, weeding, pruning, and removal of woody species shall be regularly performed to stimulate dense growth of desired grass species.

Erosion and Sedimentation Control Plan Goals:

It shall be incumbent upon the owner/operator of this project to implement Best Management Practices (BMPs) to satisfy the following erosion and sedimentation control goals:

- Minimize extent and duration of earth disturbance.
- Maximize protection of existing drainage features.
- Minimize soil compaction.
- Utilize measures or controls that prevent or minimize generation of increased stormwater run-off.

The owner operator shall employ the Best Management Practices (BMPs) described within these plans. If conditions exist during the construction of this project which fail to satisfy the above described goals, additional BMPs shall be employed by the owner/operator as necessary to satisfy the goals.

Anticipated Construction Wastes and Disposal Methods:

The anticipated construction wastes associated with this project are as follows:

- Surplus concrete and concrete washout wastewater.
- Broken or cut remnants of various masonry products.
- Bent or cut remnants of various metallic materials.
- Scrap wood, paper, and cardboard packaging from construction materials.
- Sanitary wastewater and solids from portable toilet facilities.

Hardened surplus concrete and broken/cut remnants of masonry products may be pulverized and used as non-structural fill material.

The owner operator shall remove all scrap wood, paper, cardboard, and metallic building materials and wastes from the site and shall recycle or dispose in accordance with the Department's Solid Waste Management Regulations at 25 Pa. Code 260.1 et seq., 271.1., and 287.1 et seq. No scrap wood, paper, cardboard, or metallic building materials shall be burned, buried, dumped, or discharged at the site.

The owner operator shall furnish, install, and maintain self-contained sanitary portable toilet facility(ies) on the construction site during the construction period. The owner operator will provide continuous maintenance and cleaning of the facility(ies) to insure sanitary conditions. Disposal of waste from the portable toilet facility(ies) shall be at a site approved by the Pennsylvania Department of Environmental Protection.

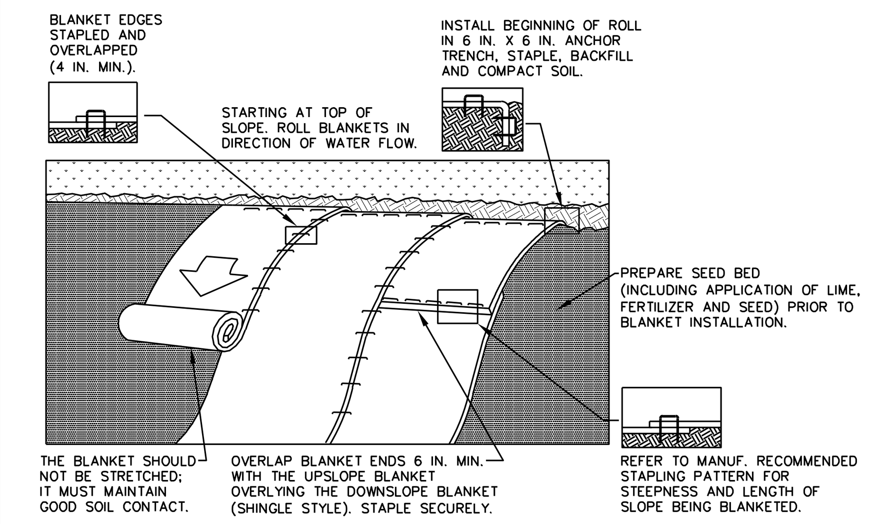

NOTES:

SEED AND SOIL AMENDMENTS SHALL BE APPLIED ACCORDING TO THE RATES IN THE PLAN DRAWINGS PRIOR TO INSTALLING THE BLANKET.

PROVIDE ANCHOR TRENCH AT TOE OF SLOPE IN SIMILAR FASHION AS AT TOP OF SLOPE.

SLOPE SURFACE SHALL BE FREE OF ROCKS, CLODS, STICKS, AND GRASS.

BLANKET SHALL HAVE GOOD CONTINUOUS CONTACT WITH UNDERLYING SOIL THROUGHOUT ENTIRE LENGTH. LAY BLANKET LOOSELY AND STAKE OR STAPLE TO MAINTAIN DIRECT CONTACT WITH SOIL. DO NOT STRETCH BLANKET.

THE BLANKET SHALL BE STAPLED IN ACCORDANCE WITH THE MANUFACTURER'S RECOMMENDATIONS.

BLANKETED AREAS SHALL BE INSPECTED WEEKLY AND AFTER EACH RUNOFF EVENT UNTIL PERENNIAL VEGETATION IS ESTABLISHED TO A MINIMUM UNIFORM 70% COVERAGE THROUGHOUT THE BLANKETED AREA. DAMAGED OR DISPLACED BLANKETS SHALL BE RESTORED OR REPLACED WITHIN 4 CALENDAR DAYS.

STANDARD CONSTRUCTION DETAIL #11-1
EROSION CONTROL BLANKET INSTALLATION
NOT TO SCALE

STANDARD CONSTRUCTION DETAIL #4-1 COMPOST FILTER SOCK

Standard Symbol = nn"CFS

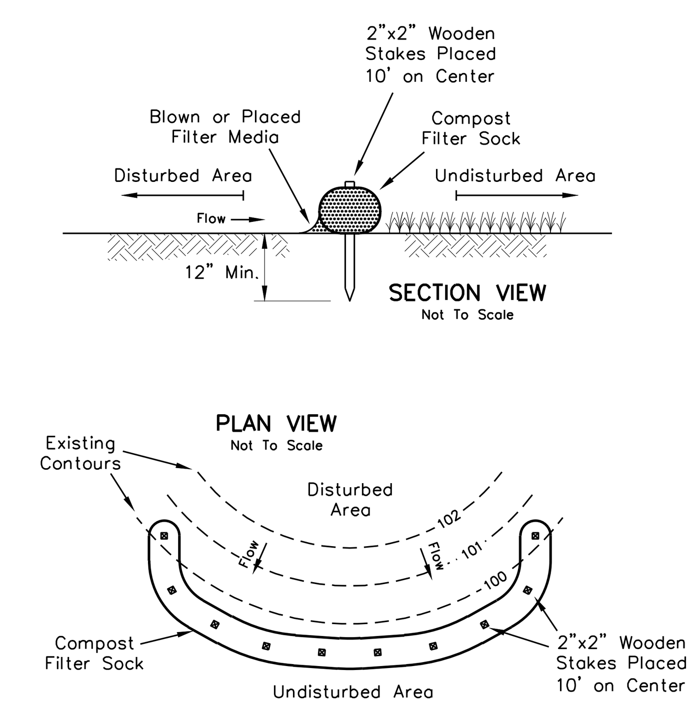

Compost Filter Sock No.	Filter Sock Diameter	Filter Sock Length	Tributary Slope Length	Tributary Area Width	Tributary Slope Percentage
Existing 1	18"	177'	40'	177'	50%
Existing 2	18"	164'	65'	164'	3.5%
Existing 3	18"	100'	40'	100'	50%

Installation Specifications:

1. Filter Sock Fabric shall meet the standards of Table 4.1 of the PaDEP Erosion and Sediment Pollution Control Program Manual (Technical Guidance Document 363-2134-008, March 2012, Page 63). Compost shall meet the standards of Table 4.2 of Technical Guidance Document 363-2134-008, March 2012, Page 64.
2. Compost Filter Socks shall be placed at level existing grade. Both ends of the sock shall be extended at least 8 feet up slope at 45 degrees to the main sock alignment (See Figure 4.1, Technical Guidance Document 363-2134-008, March 2012, Page 61). Maximum slope length above any sock shall not exceed that shown on Figure 4.2 of Technical Guidance Document 363-2134-008, March 2012, Page 66. Stakes may be installed immediately downslope of the sock if so specified by the manufacturer.
3. Traffic and equipment shall not be permitted to cross Compost Filter Socks.
4. Upon stabilization of the area tributary to Compost Filter Socks, stakes shall be removed. The Compost Filter Socks may be left in place and vegetated or removed. If removed, the mesh shall be cut open and the mulch spread as a soil supplement.

Maintenance Program

1. Compost Filter Sock shall be inspected weekly and after each runoff event. Damaged Compost Filter Socks shall be repaired according to manufacturer's specifications or replaced within 24 hours of inspection.
2. Accumulated sediment shall be removed when it reaches half the aboveground height of the sock and returned to the construction site to be used as nonstructural fill material.
3. Biodegradable Compost Filter Socks shall be replaced after six months; Photodegradable Compost Filter Socks after one year. Polypropylene Compost Filter Socks shall be replaced according to manufacturer's recommendations.

STABILIZATION SPECIFICATIONS

1. PERMANENT STABILIZATION IS DEFINED AS A MINIMUM UNIFORM 70% PERENNIAL VEGETATIVE COVER OR OTHER PERMANENT NON-VEGETATIVE COVER WITH A DENSITY SUFFICIENT TO RESIST ACCELERATED SURFACE EROSION AND SUBSURFACE CHARACTERISTICS SUFFICIENT TO RESIST SLIDING AND OTHER MOVEMENTS.
2. IMMEDIATELY AFTER EARTH DISTURBANCE ACTIVITIES CEASE, THE OPERATOR SHALL STABILIZE THE DISTURBED AREAS. DURING NON-GERMINATING PERIODS, MULCH MUST BE APPLIED AT THE SPECIFIED RATES. DISTURBED AREAS WHICH ARE NOT AT FINISHED GRADE AND WHICH WILL BE RE-DISTURBED WITHIN 1 YEAR MUST BE STABILIZED IN ACCORDANCE WITH THE TEMPORARY VEGETATIVE STABILIZATION SPECIFICATIONS. DISTURBED AREAS WHICH ARE AT FINAL GRADE OR WHICH WILL NOT BE RE-DISTURBED WITHIN 1 YEAR MUST BE STABILIZED IN ACCORDANCE WITH THE PERMANENT VEGETATIVE STABILIZATION SPECIFICATIONS.
3. AN EROSION CONTROL BLANKET WILL BE INSTALLED ON ALL DISTURBED SLOPES STEEPER THAN 3:1, ALL AREAS OF CONCENTRATED FLOWS, AND DISTURBED AREAS WITHIN 50' OF WATERS OF THE COMMONWEALTH.
4. STRAW AND HAY MULCH SHOULD BE ANCHORED IMMEDIATELY AFTER APPLICATION TO PREVENT BEING WINDBLOWN. A TRACTOR-DRAWN IMPLEMENT MAY BE USED TO "CRIMP" THE STRAW OR HAY INTO THE SOIL. THIS METHOD IS LIMITED TO SLOPES NO STEEPER THAN 3:1. THE MACHINERY SHOULD BE OPERATED ON THE CONTOUR. THE CRIMPING OF HAY OR STRAW BY RUNNING OVER IT WITH TRACKED MACHINERY IS NOT RECOMMENDED. A WOOD CELLULOSE FIBER MAY BE SPREAD OVER THE STRAW MULCH AT A RATE OF 1,500 LB./ACRE.
5. TRACKING SLOPES IS REQUIRED BY RUNNING TRACKED MACHINERY UP AND DOWN THE SLOPE, LEAVING TREAD MARKS PARALLEL TO THE CONTOUR. IF A BULLDOZER IS USED, THE BLADE SHALL BE IN THE UP POSITION. CARE SHALL BE EXERCISED ON SOILS HAVING A HIGH CLAY CONTENT TO AVOID OVER-COMPACTION.
6. TOPSOIL SHALL BE PLACED AT A MINIMUM DEPTH OF 6 INCHES ON ALL DISTURBED AREAS TO BE REVEGETATED.

PERMANENT SEEDING

1. ALL DISTURBED AREAS THAT ARE NOT TO BE PAVED SHALL BE COVERED WITH PERMANENT TURF LAWN SEEDING, VEGETATED SWALE / VEGETATED FILTER STRIP, BIO-RETENTION POND FLOOR SEEDING, OR A MULCHED PLANTING BED (SHREDDED HARDWOOD TREE BARK MULCH) TO MINIMIZE EROSION, UNLESS OTHERWISE DIRECTED BY THE OWNER.
2. HAY OR STRAW MULCHING SHALL BE USED TO PROTECT PERMANENT SEEDING AND HELP IN THE PREVENTION OF ACCELERATED RUN-OFF. CLEAN HAY OR STRAW MULCHING SHALL BE REQUIRED ON ALL DISTURBED AREAS AND APPLIED AT A RATE OF 3 TONS PER ACRE (EQUIVALENT TO 0.75" TO 1" DEEP). AN EMULSIFIED ASPHALT TACK BINDING ANCHORING MATERIAL SHALL BE APPLIED TO THE HAY OR STRAW MULCHING AT A RATE OF 150 GALLONS/ACRES. CLEAN HAY OR STRAW MULCHING SHALL NOT BE FINELY CHOPPED OR BROKEN DURING THE APPLICATION.
3. THE FOLLOWING MIXTURES ARE TO BE USED:

PERMANENT TURF LAWN:

SPECIES	% PURE LIVE SEED	APPLICATION RATE	SEEDING DATES
WINTER RYE	100	56 LBS/ACRE	MAR 1 to JUN 1 or AUG 1 to OCT 1
KY BLUEGRASS	100	25 LBS/ACRE	MAR 1 to JUN 1 or AUG 1 to OCT 1
REDTOP	100	3 LBS/ACRE	MAR 1 to JUN 1 or AUG 1 to OCT 1

VEGETATED SWALE / VEGETATED FILTER STRIP:

SPECIES	% PURE LIVE SEED	APPLICATION RATE	SEEDING DATES
WINTER RYE	100	56 LBS/ACRE	MAR 1 to JUN 1 or AUG 1 to OCT 1
TALL FESCUE	100	60 LBS/ACRE	MAR 1 to JUN 1 or AUG 1 to OCT 1
REDTOP	100	3 LBS/ACRE	MAR 1 to JUN 1 or AUG 1 to OCT 1

BIO-RETENTION BASIN SEEDING MIX:

	APPLICATION RATE	SEEDING DATES
USE SEED MIX "ERNMX-126" by ERNST CONSERVATION SEEDS, LLP MEADVILLE, PA (800) 873-3321	1 LB/1000 SF	MAR 1 to JUN 1 or AUG 1 to OCT 1

MULCHED PLANTING BED:

	APPLICATION DEPTH	APPLICATION DATES
SHREDDED HARDWOOD TREE BARK MULCH	4 INCHES	MAR 1 to NOV 31

4. IN THE ABSENCE OF SOIL TEST RESULTS, 5-10-10 FERTILIZER AT A RATE OF 2,000 LBS/ACRE, SHALL BE APPLIED WITH THE PERMANENT SEEDING.
5. IN THE ABSENCE OF SOIL TEST RESULTS, AGRICULTURAL-GRADE LIME AT A RATE OF 6 TONS/ACRE, SHALL BE APPLIED WITH THE PERMANENT SEEDING.

TEMPORARY SEEDING

1. IN ORDER TO ESTABLISH A QUICK VEGETATIVE COVER OVER DISTURBED AREAS, THE FOLLOWING TEMPORARY SEED MIXTURE SHALL BE USED.
2. STABILIZATION EFFORTS DURING THE NON-GERMINATING PERIOD OF OCTOBER 15 TO MARCH 15 SHALL CONSIST OF HAY OR STRAW MULCHING APPLIED AT A RATE OF 3 TONS PER ACRE (EQUIVALENT TO 0.75" TO 1" DEEP). THE CLEAN HAY OR STRAW MULCHING SHALL NOT BE FINELY CHOPPED OR BROKEN DURING THE APPLICATION.
3. THE FOLLOWING MIXTURE IS TO BE USED:

TEMPORARY SEEDING:

SPECIES:	% PURE LIVE SEED	APPLICATION RATE	SEEDING DATES
ANNUAL RYEGRASS	100	40 LBS/ACRE	ANYTIME

4. IN THE ABSENCE OF SOIL TEST RESULTS, 10-10-10 FERTILIZER AT A RATE OF 500 LBS/ACRE, SHALL BE APPLIED WITH THE TEMPORARY SEEDING.
5. IN THE ABSENCE OF SOIL TEST RESULTS, AGRICULTURAL-GRADE LIME AT A RATE OF 1 TON/ACRE, SHALL BE APPLIED WITH THE TEMPORARY SEEDING.

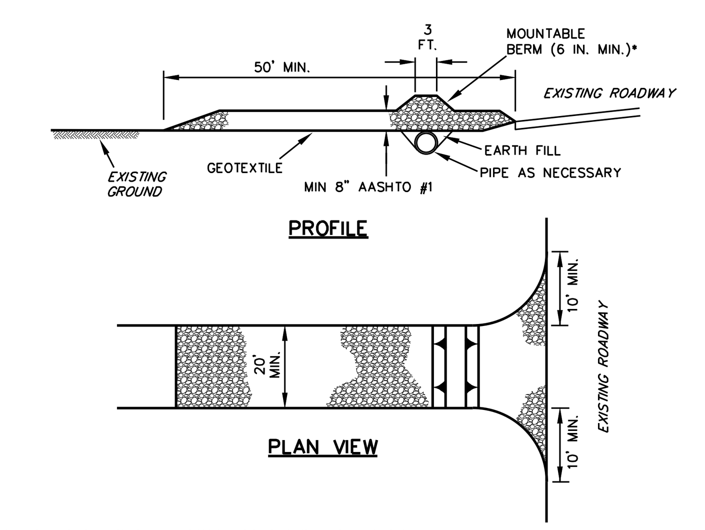

* MOUNTABLE BERM USED TO PROVIDE PROPER COVER FOR PIPE

NOTES:

REMOVE TOPSOIL PRIOR TO INSTALLATION OF ROCK CONSTRUCTION ENTRANCE. EXTEND ROCK OVER FULL WIDTH OF ENTRANCE.

RUNOFF SHALL BE DIVERTED FROM ROADWAY TO A SUITABLE SEDIMENT REMOVAL BMP PRIOR TO ENTERING ROCK CONSTRUCTION ENTRANCE.

MOUNTABLE BERM SHALL BE INSTALLED WHEREVER OPTIONAL CULVERT PIPE IS USED AND PROPER PIPE COVER AS SPECIFIED BY MANUFACTURER IS NOT OTHERWISE PROVIDED. PIPE SHALL BE SIZED APPROPRIATELY FOR SIZE OF DITCH BEING CROSSED.

MAINTENANCE: ROCK CONSTRUCTION ENTRANCE THICKNESS SHALL BE CONSTANTLY MAINTAINED TO THE SPECIFIED DIMENSIONS BY ADDING ROCK. A STOCKPILE SHALL BE MAINTAINED ON SITE FOR THIS PURPOSE. ALL SEDIMENT DEPOSITED ON PAVED ROADWAYS SHALL BE REMOVED AND RETURNED TO THE CONSTRUCTION SITE IMMEDIATELY. IF EXCESSIVE AMOUNTS OF SEDIMENT ARE BEING DEPOSITED ON ROADWAY, EXTEND LENGTH OF ROCK CONSTRUCTION ENTRANCE BY 50 FOOT INCREMENTS UNTIL CONDITION IS ALLEVIATED OR INSTALL WASH RACK. WASHING THE ROADWAY OR SWEEPING THE DEPOSITS INTO ROADWAY DITCHES, SEWERS, CULVERTS, OR OTHER DRAINAGE COURSES IS NOT ACCEPTABLE.

STANDARD CONSTRUCTION DETAIL #3-1
ROCK CONSTRUCTION ENTRANCE
NOT TO SCALE

Erosion and Sediment Control Plan Notes and Details

Construction Drawings for Sitework
at the Commerce Street Substation
for
The Borough of Chambersburg
located in
Chambersburg Borough
Franklin County, PA

REVISIONS

NO.	DATE	DESCRIPTION	BY
1	10/01/2020	Addition of Design Details	GDW

COMMONWEALTH OF PENNSYLVANIA REGISTERED PROFESSIONAL LANCE S. KEGERREIS ENGINEER No PE-052858-E

DENNIS E. BLACK ENGINEERING, INCORPORATED
ENGINEERING-SURVEYING-PLANNING
2400 PHILADELPHIA AVENUE
CHAMBERSBURG, PA 17201
(717)263-8794 (888)238-0661

DWN. GDW	CLIENT No. 1075	ORDER No. 190096.00	SHEET 5 OF 5
CHK. GDW	DATE 9/16/2020	AutoCAD DRAWING REF. NUMBER	DRAWING No.
APP. GDW	SCALE 1"=20'	AUTOCAD#	20-51

THE ORIGINAL DRAWING AND THE INFORMATION SHOWN THEREON ARE THE PROPERTY OF *D. E. BLACK ENG., INC.* AND SHALL NOT BE DUPLICATED WITHOUT WRITTEN PERMISSION

FILE N:\Land Projects 2019\190096.00\dwg\Sheet Files\190096.00-BoroughSubstation-SubstationContract.dwg LAYOUT:Sh5-E&SDetails BY: Glen Watson ON:10/1/2020 9:07 AM